STANDARD CONSTRUCTION DETAILS

STORM DRAINAGE

EROSION CONTROL

RESIDENTIAL LOT DRAINAGE REQUIREMENTS

REVISED - APRIL 2015

CITY OF ALLEN

DEPARTMENT OF ENGINEERING

TABLE OF CONTENTS

STORM DRAINAGE

GENERAL NOTES SD-D01
CONCRETE,ASPHALT STREET REPAIR,PIPE BEDDING. SD-D02
UTILITY SUPPORT,WATER MAIN LOWERING,CONCRETE COLLAR. SD-D03
TYPE "A" STORM SEWER MANHOLE. SD-D04
TYPE "B" STORM SEWER MANHOLE. SD-D05
WYE INLET DETAIL SD-D06
RECESSED CURB INLET,4,6,8,10 FOOT INLETS SD-D07
STANDARD CURB INLET,4,6,8,10 FOOT INLETS SD-D08
TYP. SECTION "B" STANDARD RECESSED & CURB INLETS (4',6',8',10' INLETS) SD-D09
TYP. SECTION "C" STANDARD RECESSED & CURB INLETS (4',6',8',10' INLETS) SD-D10
REINFORCING STEEL SCHEDULE,4,6,8,10 FOOT INLETS. SD-D11
12,14,16, & 20 FOOT INLETS SD-D12
TYP. SECTION "B" STANDARD RECESSED & CURB 12,14,16,& 20 FOOT INLETS . . . SD-D13
REINFORCING STEEL SCHEDULE 12,14,16,& 20 FOOT INLETS. SD-D14
BAR DIAGRAMS, INLET FRAME & COVER. SD-D15
PRECAST CURB INLET. SD-D16
COMBINATION INLETS,GRATE DETAILS,BAR DIAGRAMS SD-D17
COMBINATION INLET, TWO GRATE INLET. SD-D18
COMBINATION INLET, THREE GRATE INLET SD-D19
COMBINATION INLET, FOUR GRATE INLET. SD-D20
TWO GRATE INLET SD-D21
THREE GRATE INLET. SD-D22
FOUR GRATE INLET. SD-D23
SIX GRATE INLET. SD-D24
GRATE DETAILS, STANDARD DROP INLET. SD-D25
TYPE I & II CHANNEL SECTION SD-D26
TYPE III NORMAL CHANNEL SECTION SD-D27
TYPE "A" HEADWALL. SD-D28
TYPE "B" HEADWALL. SD-D29
TYPE "C" HEADWALL. SD-D30
STORM RELATED FLUMES SD-D31

EROSION CONTROL

STORM WATER POLLUTION PLAN NOTES SD-EC01
SILT FENCE NOTES SD-EC02
SEDIMENT BARRIER AT INLET
(AFTER PAVEMENT CONSTRUCTION) SD-EC03
TYPE P2 INLET FILTERS AFTER PAVEMENT CONSTRUCTION. SD-EC04
STORM WATER POLLUTION PLAN DETAILS SD-EC05
DEBRIS CONTAINMENT FOR RESIDENTIAL & COMMERCIAL LOTS. SD-EC06
DESIGNATED WASHOUT PIT FOR RESIDENTIAL LOTS SD-EC07

RESIDENTIAL LOT DRAINAGE REQUIREMENT

LOT GRADING TYPE "A". SD-RL01
LOT GRADING TYPE "B". SD-RL02
LOT GRADING TYPE "C". SD-RL03
LOT GRADING TYPE "D". SD-RL04
SIDE SWALE ENCROACHMENT ON RESIDENTIAL LOT SD-RL05

STANDARD CONSTRUCTION DETAILS

STORM DRAINAGE

REVISED - MARCH 2015

CITY OF ALLEN

DEPARTMENT OF ENGINEERING

GENERAL NOTES

1. ALL CONCRETE DRAINAGE STRUCTURES SHALL HAVE A MINIMUM COMPRESSED STRENGTH OF 3600 P.S.I.
2. ALL CRUSHED STONE SHALL BE 3/4", PASSING #4 SIEVE.
3. ALL FIELD JOINTS WILL BE APPROVED BY THE CITY ENGINEER IF NECESSARY. FIELD JOINTS SHALL BE WIPED ON THE INSIDE AND OUTSIDE TO PROVIDE FOR SMOOTH FLOW OF WATER.
4. RAMNECK COMPOUND OR APPROVED EQUAL SHALL BE USED FOR JOINT SEALS.
5. ALL STORM SEWER PIPE SHALL BE CAMERA INSPECTED AFTER THE INSTALLATION OF ALL UTILITIES AND PRIOR TO FINAL ACCEPTANCE OF THE PROJECT.

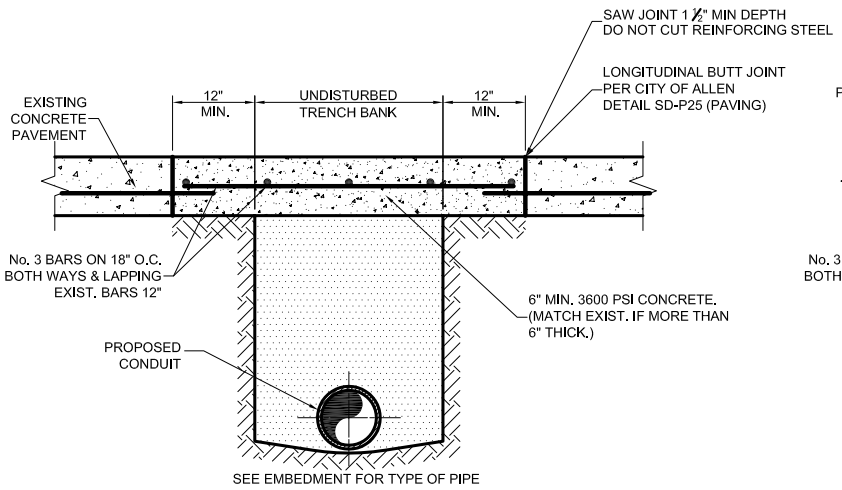

CONCRETE STREET
OR DRIVEWAY REPAIR
N.T.S.

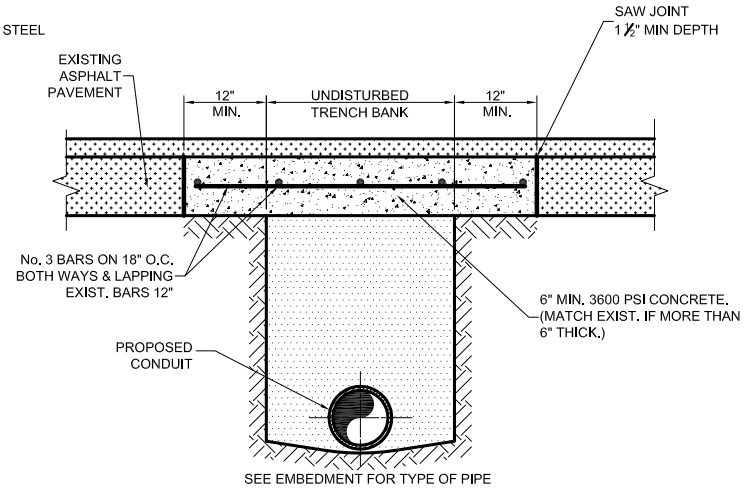

ASPHALT STREET
OR DRIVEWAY REPAIR
N.T.S.

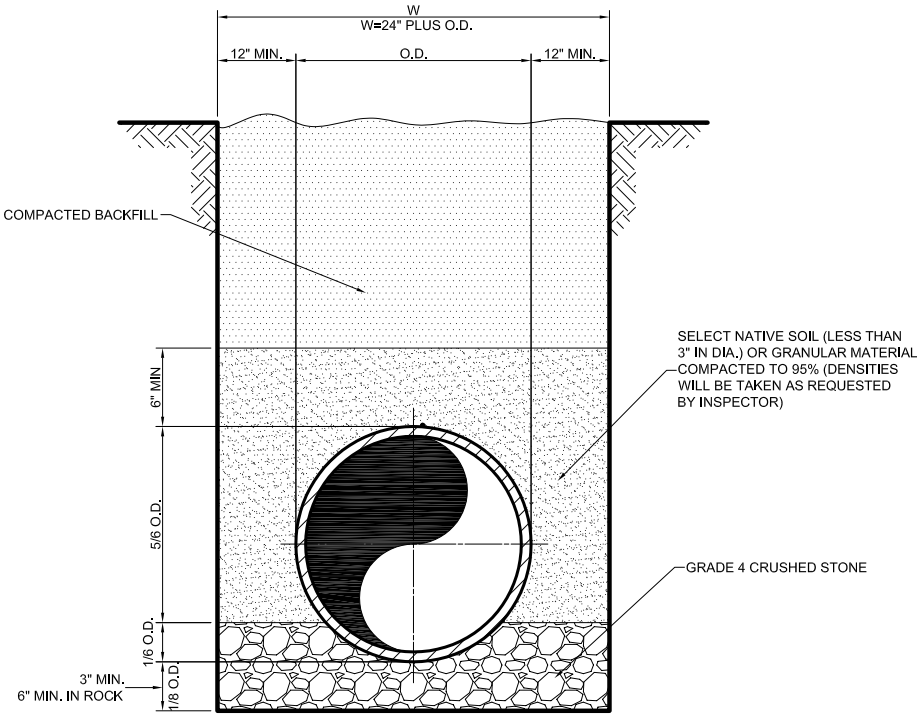

RCP STORM SEWER PIPE BEDDING

NOTE :

DEPTH OF TRENCH BELOW PIPE
3" MIN. FOR 27" PIPE & SMALLER
4" MIN. FOR 30" TO 60" PIPE
6" MIN. FOR 66" PIPE & LARGER

CITY OF ALLEN DEPARTMENT OF ENGINEERING	CONCRETE STREET REPAIR ASPHALT STREET REPAIR PIPE BEDDING	STANDARD CONSTRUCTION DETAILS STORM DRAINAGE		
		DATE: MAY 1991	REV DATE: AUG. 2006	SHEET : SD-D02

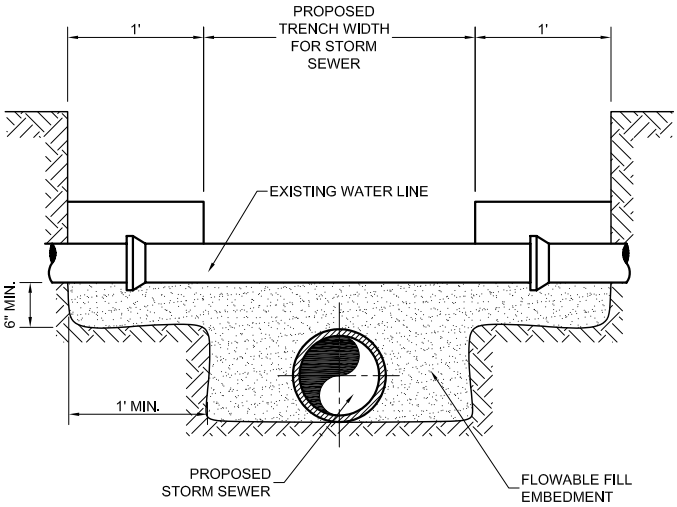

DETAIL OF
UTILITY SUPPORT

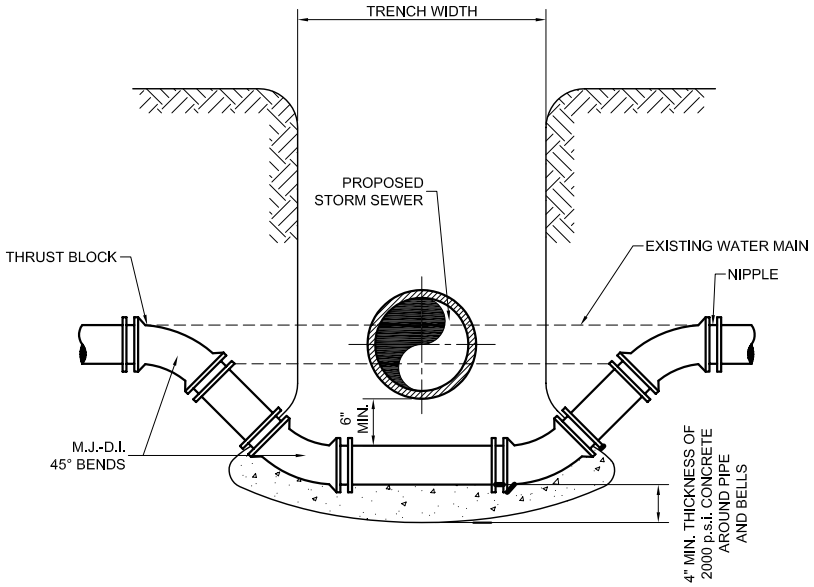

DETAIL FOR
WATER MAIN LOWERING

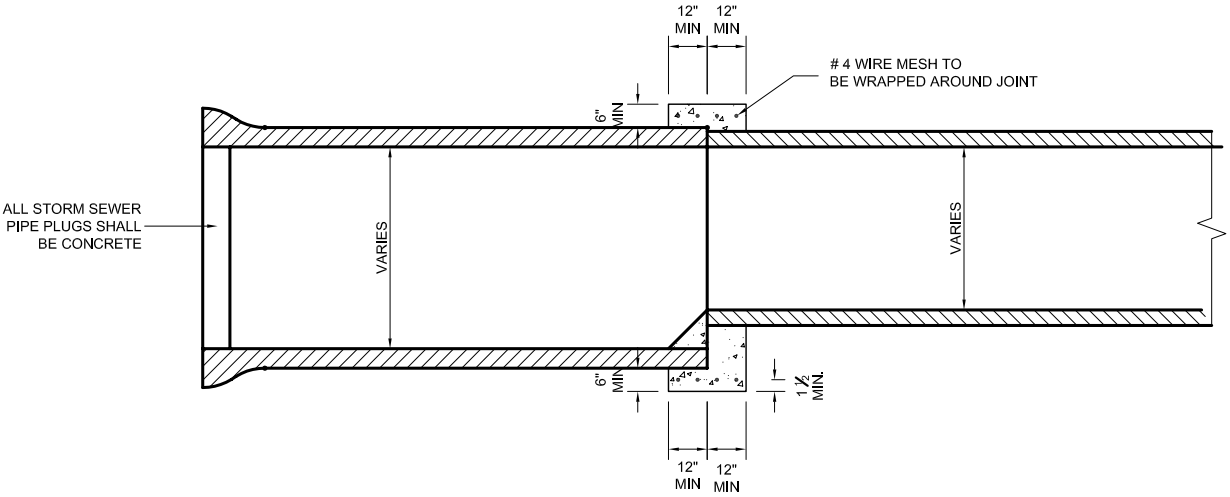

DETAIL OF CONCRETE COLLAR
FOR PIPE CONNECTIONS

CITY OF ALLEN DEPARTMENT OF ENGINEERING	UTILITY SUPPORT WATER MAIN LOWERING CONCRETE COLLAR	STANDARD CONSTRUCTION DETAILS STORM DRAINAGE		
		DATE: JULY 1991	REV DATE: AUG. 2006	SHEET: SD-D03

NOTE :
FRAME AND COVER SHALL BE BASS & HAYES PATTERN NO. 380-24 OR EQUAL AND SHALL BE GRAY CAST IRON CONFORMING TO ASTM SPEC. A-48 FOR CLASS 30 CAST IRON.

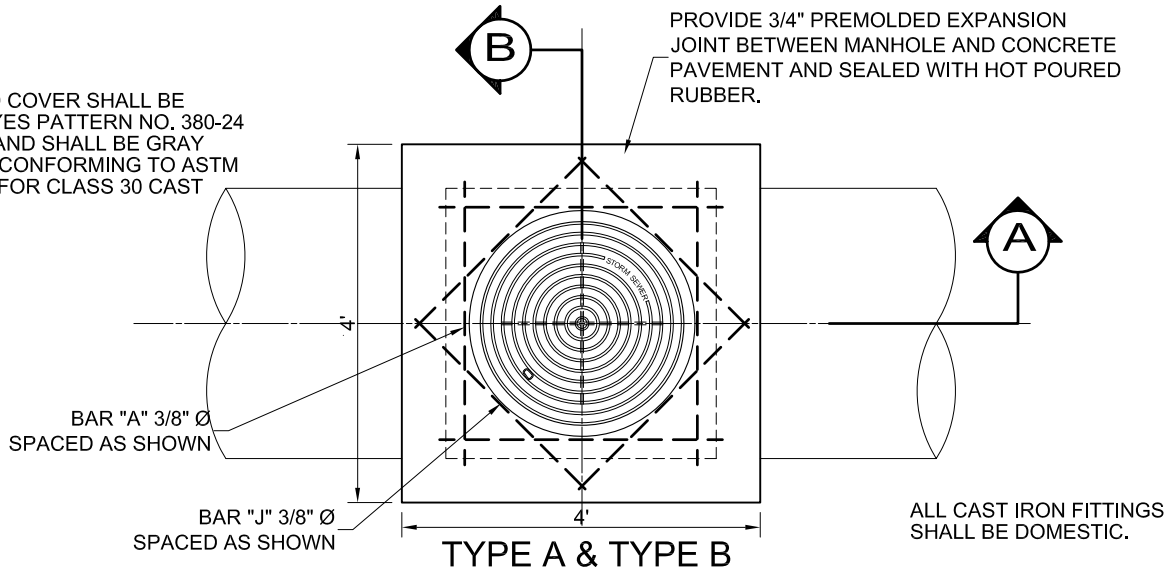

TYPE A & TYPE B STORM SEWER MANHOLE

NOTE : MAXIMUM PIPE SIZE TO BE USED 36"Ø

PLAN

SCALE N.T.S.

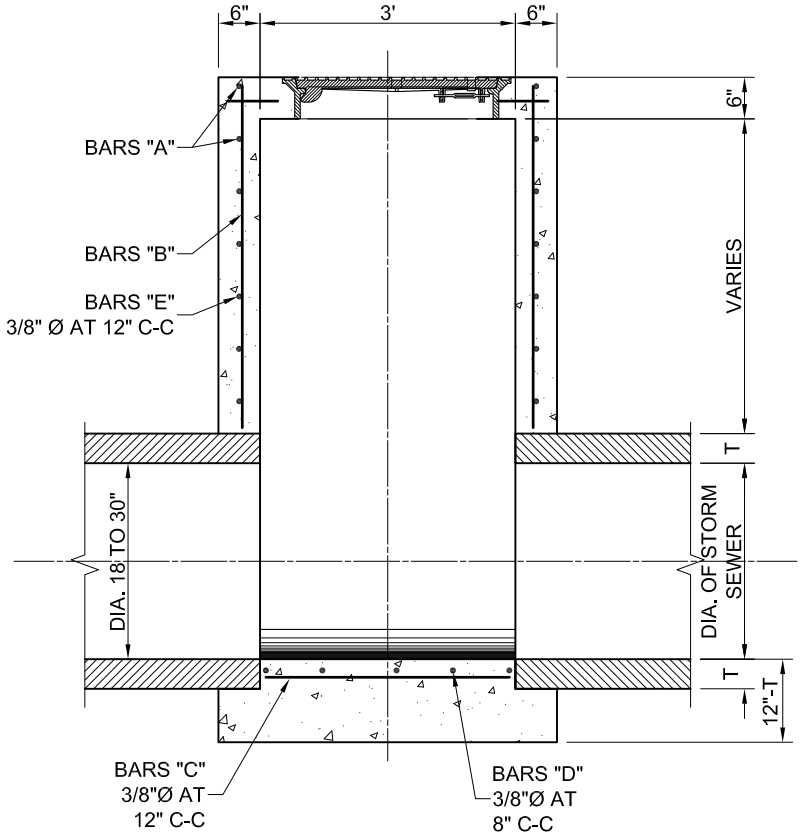

SECTION A

SCALE N.T.S.

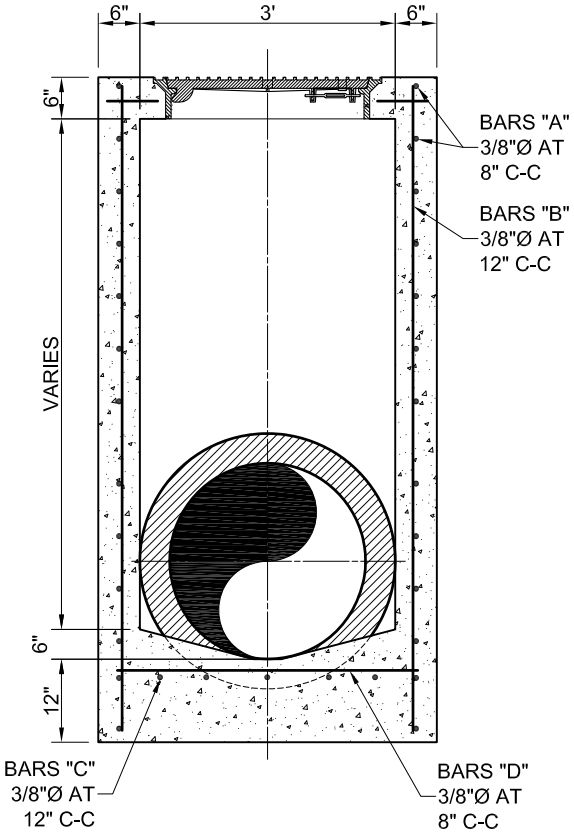

SECTION B

SCALE N.T.S.

CITY OF ALLEN DEPARTMENT OF ENGINEERING	TYPE "A" STORM SEWER MANHOLE	STANDARD CONSTRUCTION DETAILS STORM DRAINAGE		
		DATE: JULY 1991	REV DATE: JULY 2012	SHEET : SD-D04

NOTE :
FRAME AND COVER SHALL BE BASS & HAYES PATTERN NO. 380-24 OR EQUAL AND SHALL BE GRAY CAST IRON CONFORMING TO ASTM SPEC. A-48 FOR CLASS 30 CAST IRON.

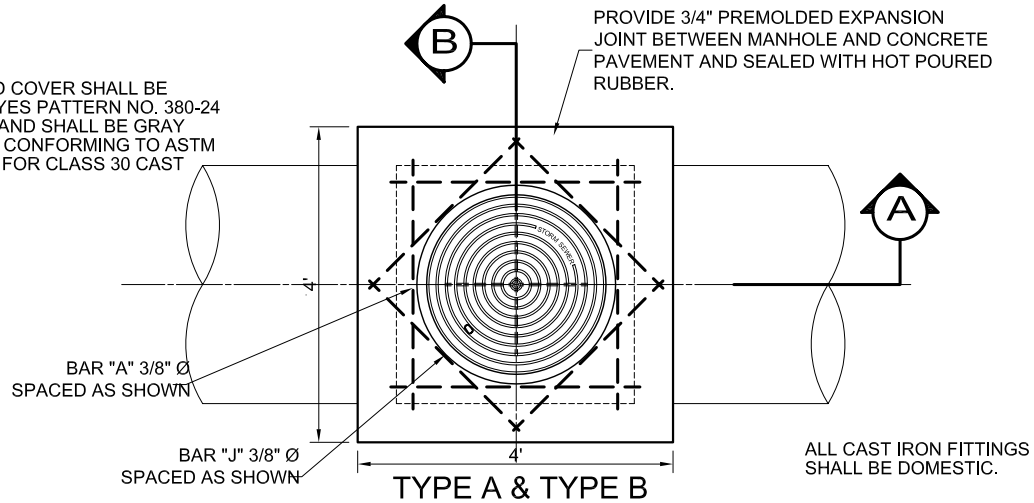

TYPE A & TYPE B STORM SEWER MANHOLE

NOTE : MAXIMUM PIPE SIZE TO BE USED 78"Ø

PLAN

SCALE N.T.S.

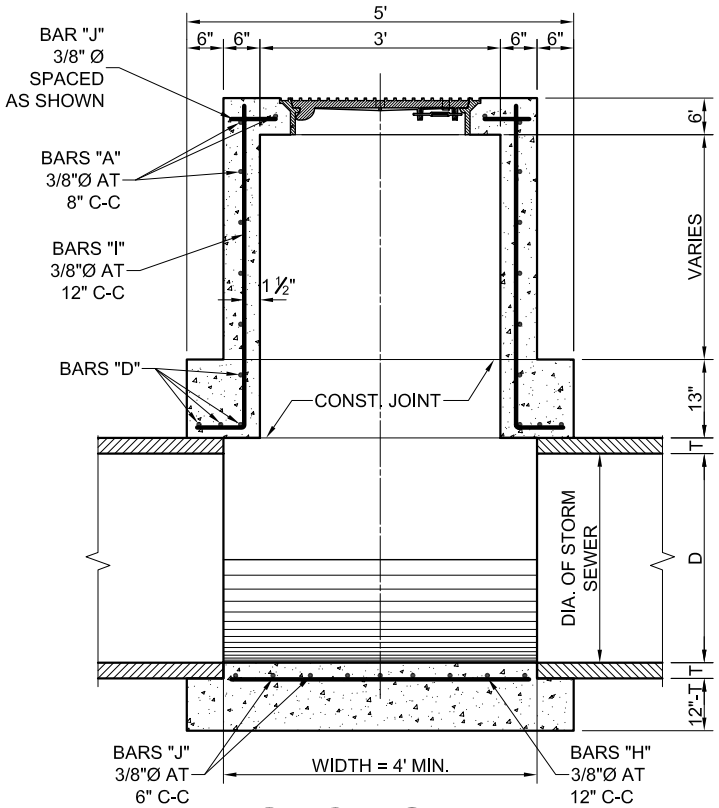

SECTION A

SCALE N.T.S.

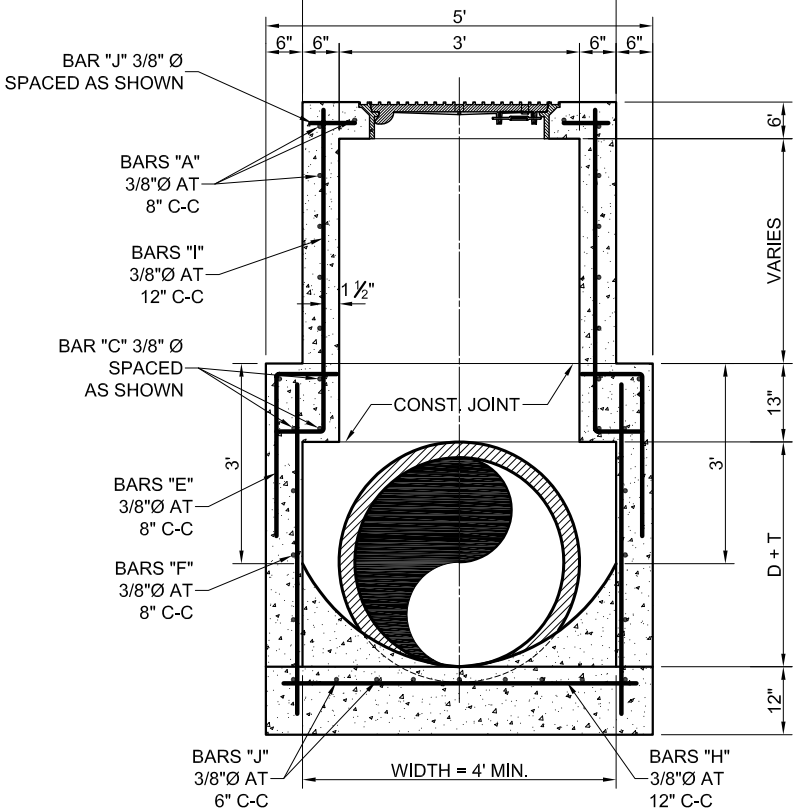

SECTION B

SCALE N.T.S.

CITY OF ALLEN DEPARTMENT OF ENGINEERING	TYPE "B" STORM SEWER MANHOLE	STANDARD CONSTRUCTION DETAILS STORM DRAINAGE		
		DATE: JULY 1991	REV DATE: AUG. 2006	SHEET : SD-D05

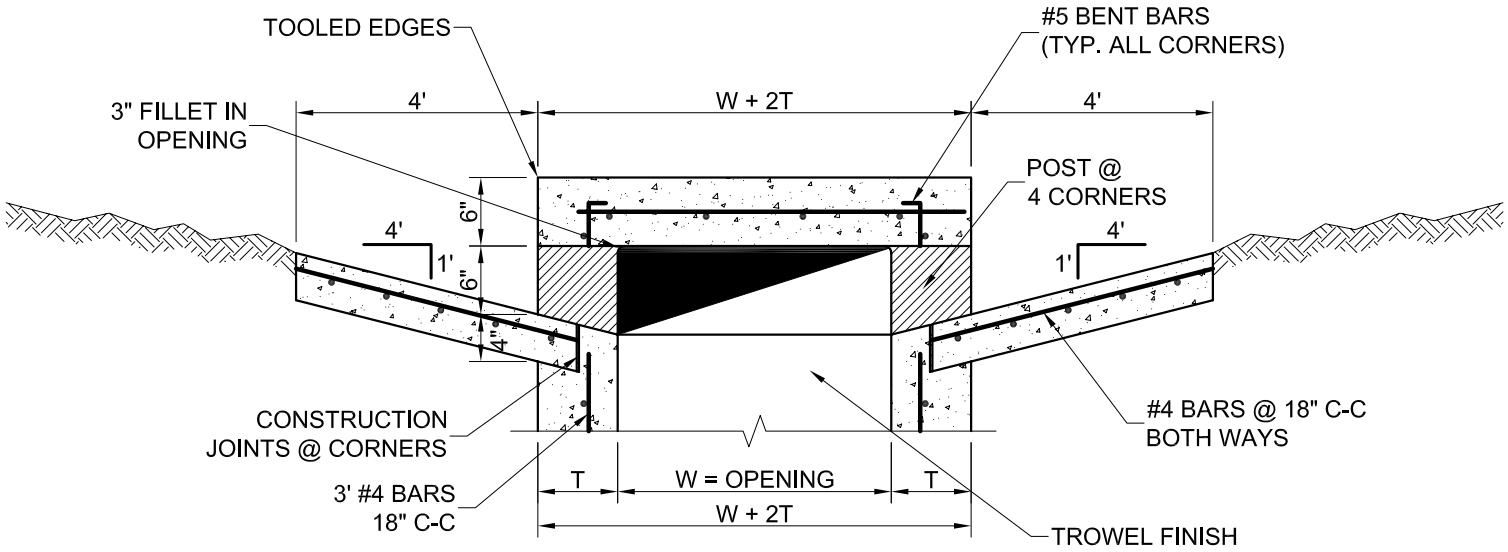

SECTION A

SCALE N.T.S.

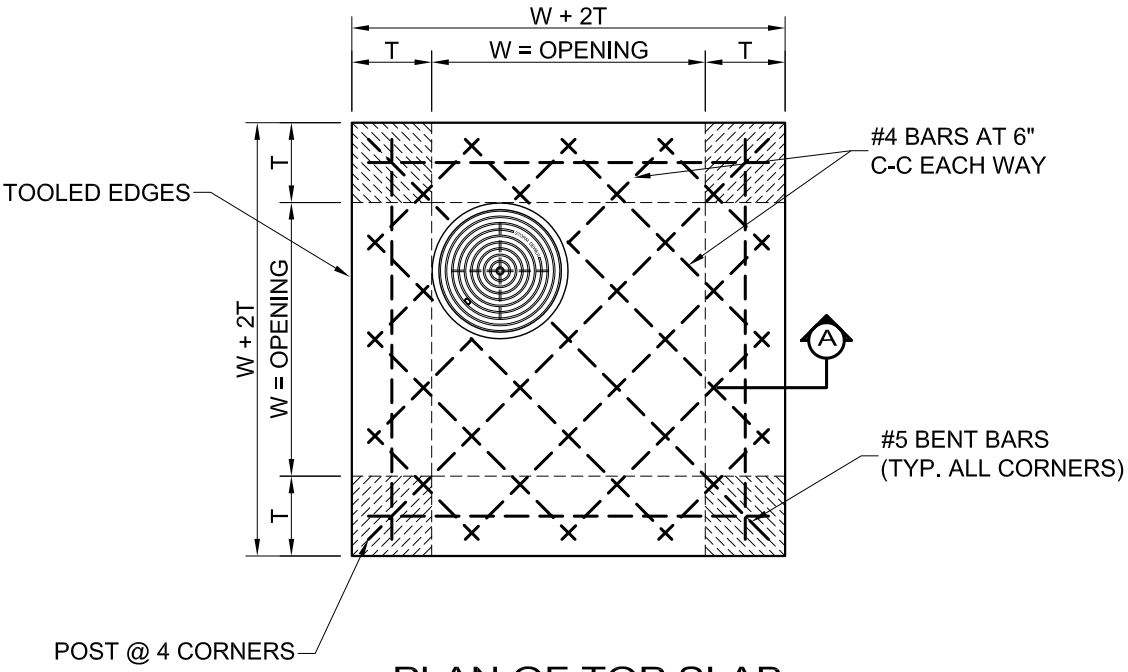

PLAN OF TOP SLAB

SCALE N.T.S.

INLET SIZE	T	W
2' SQUARE	7"	2'-0"
4' SQUARE	7"	4'-0"
5' SQUARE	8"	5'-0"
6' SQUARE	9"	6'-0"

CITY OF ALLEN
DEPARTMENT OF ENGINEERING

WYE INLET DETAIL

STANDARD CONSTRUCTION DETAILS
STORM DRAINAGE

DATE:	REV DATE:	SHEET :
JULY 1991	AUG. 2006	SD-D06

CITY OF ALLEN
DEPARTMENT OF ENGINEERING

RECESSED CURB INLET
4,6,8 AND 10 FEET INLETS

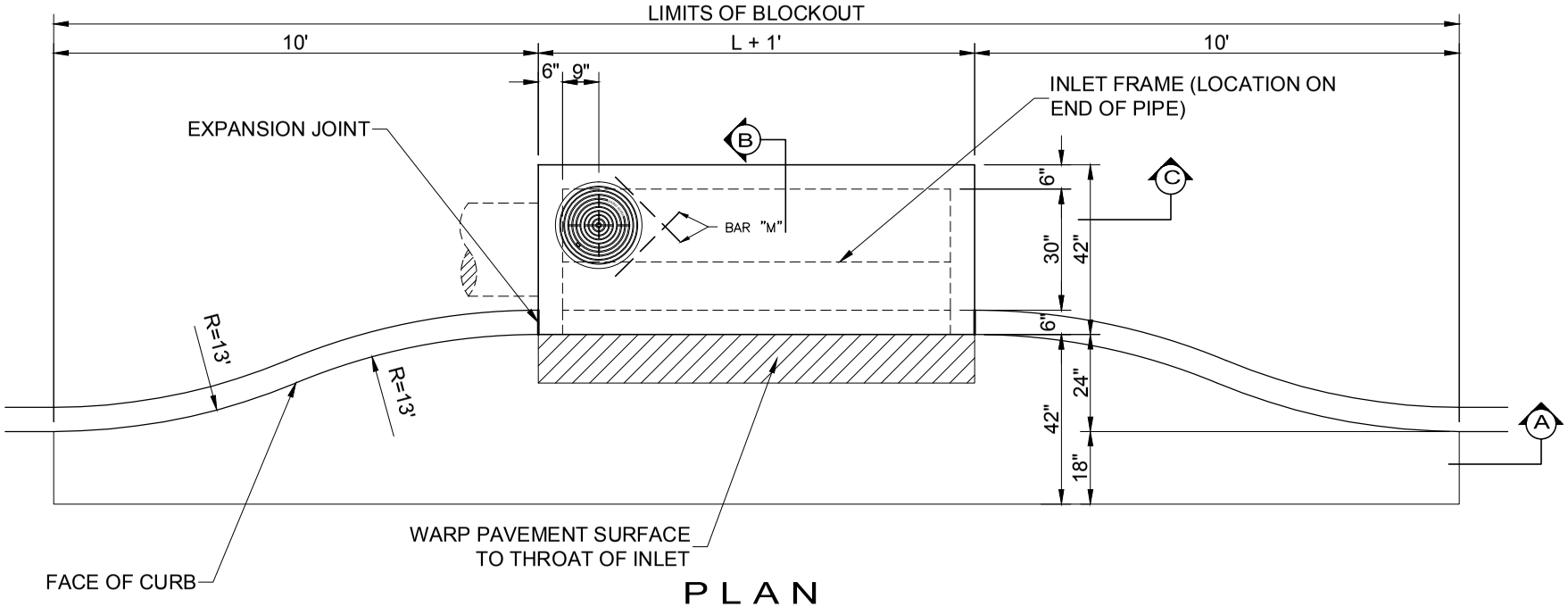

PLAN

SCALE N.T.S.

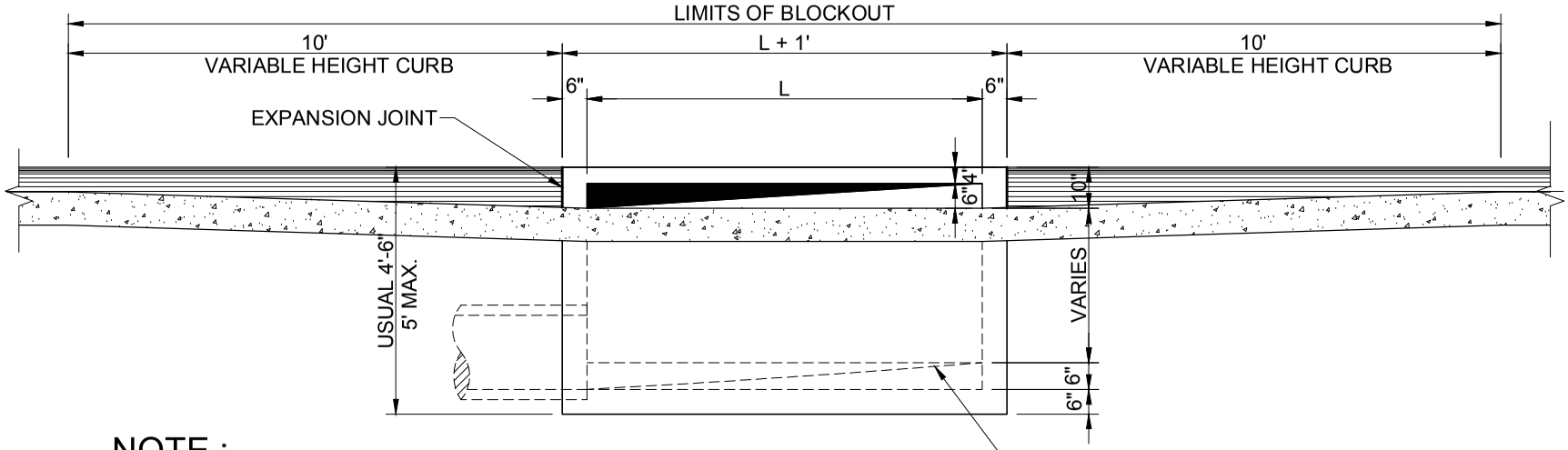

NOTE :

PIPE MAY BE PLACED IN ANY WALL, BUT SHALL NOT ENTER ANY CORNER OR BOTTOM.

#3 BAR 18" O.C.E.W. IN BLOCK OUT DRILLED INTO EXISTING CONCRETE.

WARP TO SUIT CONDITIONS
½" MORTAR FINISH, TROWELLED TO SMOOTH HARD SURFACE.

SECTION A

SCALE N.T.S.

STANDARD CONSTRUCTION DETAILS
STORM DRAINAGE

DATE: JULY 1991

REV DATE: MARCH 2015

SHEET : SD-D07

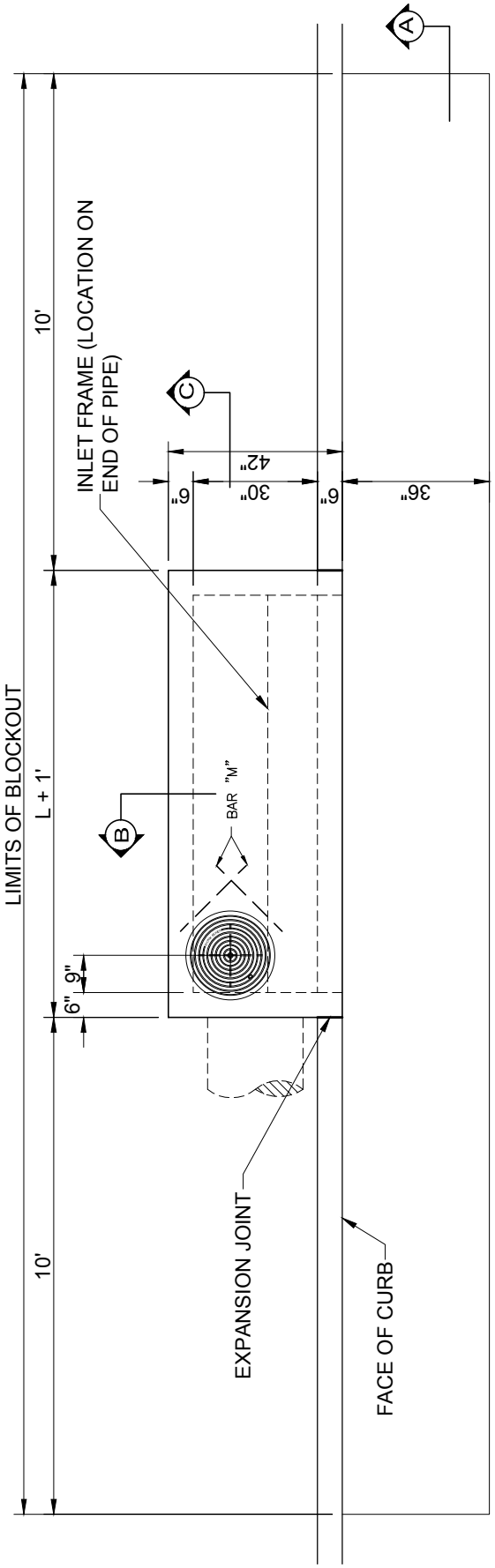

PLAN-STANDARD INLET

SCALE N.T.S.

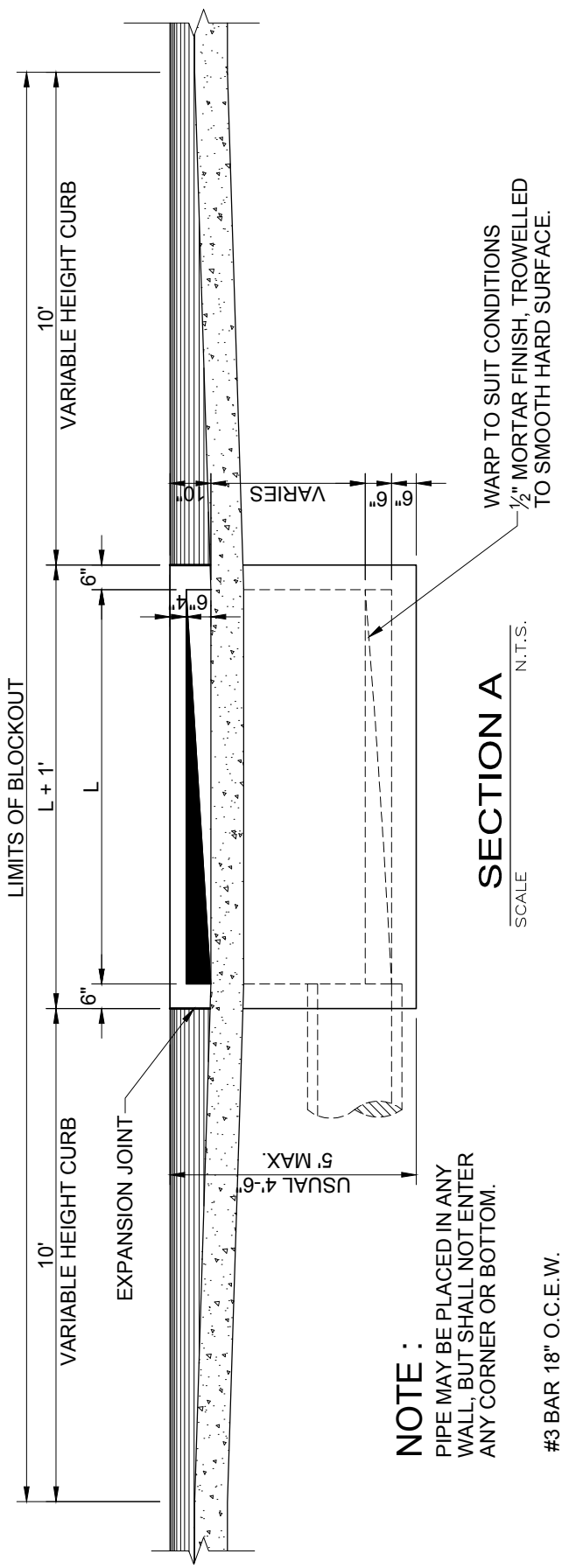

SECTION A

SCALE N.T.S.

NOTE :

PIPE MAY BE PLACED IN ANY WALL, BUT SHALL NOT ENTER ANY CORNER OR BOTTOM.

#3 BAR 18" O.C.E.W. IN BLOCK OUT DRILLED INTO EXISTING CONCRETE.

CITY OF ALLEN
DEPARTMENT OF ENGINEERING

STANDARD CURB INLET
4,6,8 AND 10 FEET INLETS

STANDARD CONSTRUCTION DETAILS
STORM DRAINAGE

DATE:	REV DATE:	SHEET :
JULY 1991	MARCH 2015	SD-D08

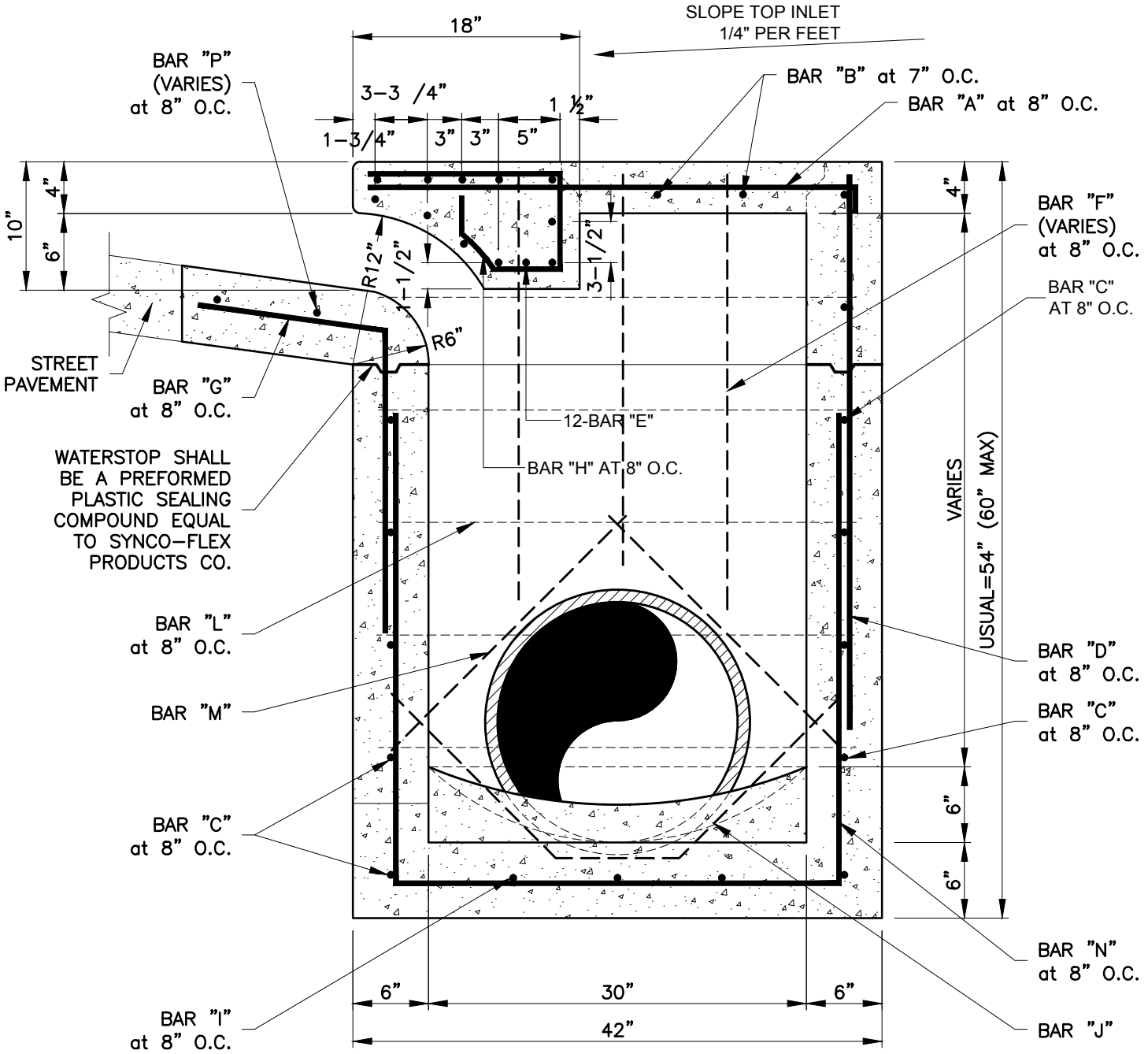

TYPICAL SECTION B

SCALE 1"=12"

CITY OF ALLEN DEPARTMENT OF ENGINEERING	TYPICAL SECTION B STANDARD RECESSED & CURB INLET (4,6,8 AND 10 FEET INLETS)	STANDARD CONSTRUCTION DETAILS STORM DRAINAGE	
		DATE: JULY 1991	REV DATE: MARCH 2015	SHEET : SD-D09

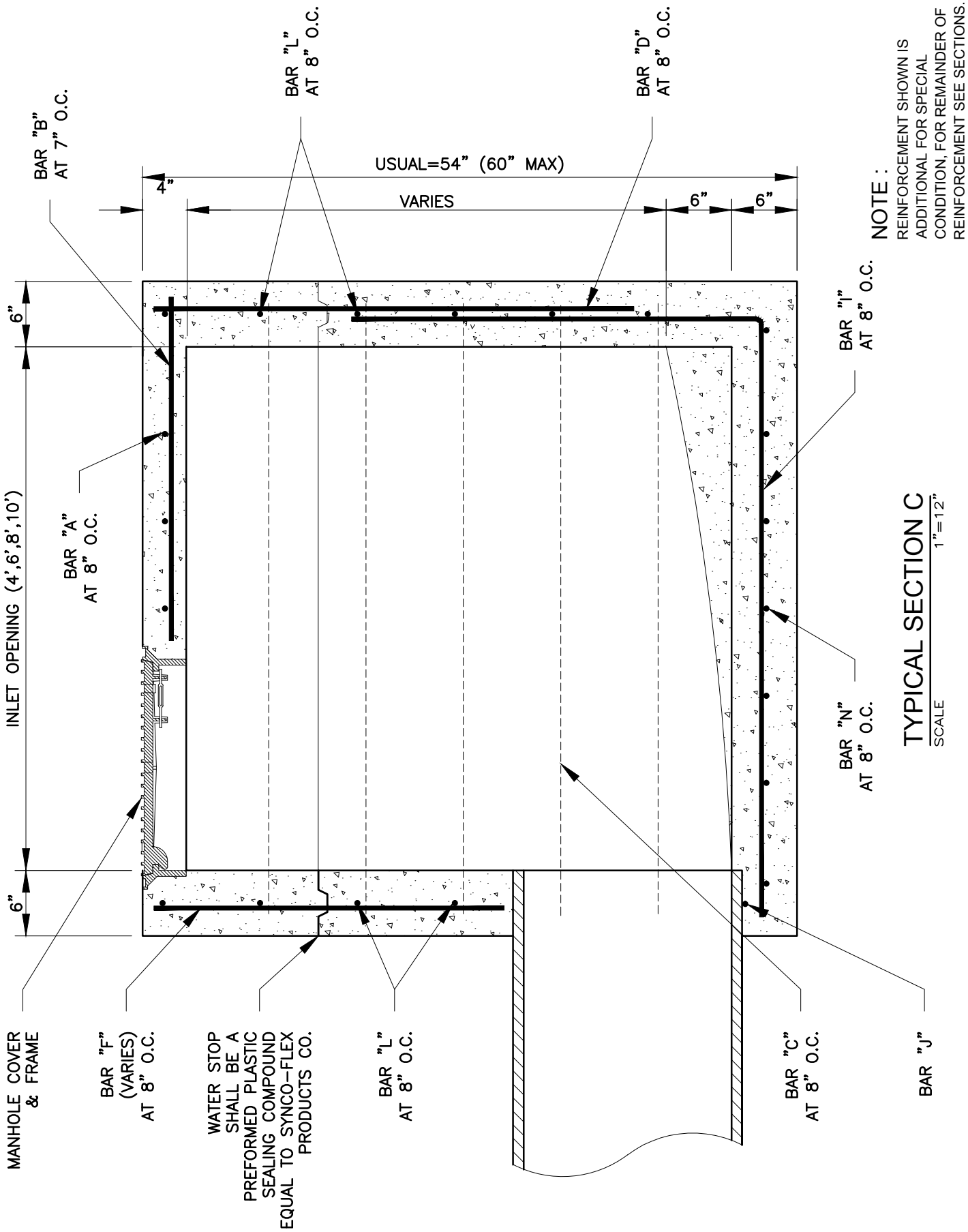

NOTE :
REINFORCEMENT SHOWN IS ADDITIONAL FOR SPECIAL CONDITION, FOR REMAINDER OF REINFORCEMENT SEE SECTIONS.

TYPICAL SECTION C
SCALE 1"=12"

CITY OF ALLEN DEPARTMENT OF ENGINEERING	TYPICAL SECTION C STANDARD & RECESSED CURB INLET (4,6,8 AND 10 FEET INLETS)	STANDARD CONSTRUCTION DETAILS STORM DRAINAGE		
		DATE: MARCH 2015	REV DATE:	SHEET : SD-D10

REINFORCING STEEL SCHEDULE
DIMENSIONS SHOWN ARE FOR MAXIMUM SIZE INLET

INLET LENGTH	BAR TYPE	BAR DIA. (#/8")	NO. REQ'D.	BAR DIMENSIONS			INLET LENGTH	BAR TYPE	BAR DIA. (#/8")	NO. REQ'D.	BAR DIMENSIONS		
				A	B	C					A	B	C
4'	A	3	5	3'-2"	0'-3"	–	8'	A	3	11	3'-2"	0'-3"	–
	B	3	2	2'-6"	–	–		B	3	2	6'-6"	–	–
	C	4	12	3'-8"	0'-3"	0'-3"		C	4	12	7'-8"	0'-3"	0'-3"
	D	4	10	3'-8"	–	–		D	4	16	3'-8"	–	–
	E	5	12	3'-8"	–	–		E	5	12	7'-8"	–	–
	F	4	3	VARIES	–	–		F	4	3	VARIES	–	–
	G	3	7	1'-3"	2'-0"	–		G	3	13	1'-3"	2'-0"	–
	H	3	7	*	*	*		H	3	13	*	*	*
	I	4	3	3'-8"	3'-2"			I	4	3	7'-8"	3'-2"	
	J	4	1	1'-6"	0'-10"	1'-6"		J	4	1	1'-6"	0'-10"	1'-6"
	K	–	–	–	–	–		K	–	–	–	–	–
	L	3	8	3'-3"	0'-3"	0'-3"		L	3	8	3'-3"	0'-3"	0'-3"
	M	4	4	2'-1"	–	–		M	4	4	2'-1"	–	–
	N	4	7	3'-2"	3'-2"	3'-2"		N	4	13	3'-2"	3'-2"	3'-2"
	O	–	–	–	–	–		O	–	–	–	–	–
	P	4	2	VARIES	–	–		P	4	2	VARIES	–	–
6'	A	3	8	3'-2"	0'-3"	–	10'	A	3	14	3'-2"	0'-3"	–
	B	3	2	4'-6"	–	–		B	3	2	8'-6"	–	–
	C	4	12	5'-8"	0'-3"	0'-3"		C	4	12	9'-8"	0'-3"	0'-3"
	D	4	13	3'-8"	–	–		D	4	19	3'-8"	–	–
	E	5	12	5'-8"	–	–		E	5	12	9'-8"	–	–
	F	4	3	VARIES	–	–		F	4	3	VARIES	–	–
	G	3	10	1'-3"	2'-0"	–		G	3	16	1'-3"	2'-0"	–
	H	3	10	*	*	*		H	3	16	*	*	*
	I	4	3	5'-8"	3'-2"			I	4	3	9'-8"	3'-2"	
	J	4	1	1'-6"	0'-10"	1'-6"		J	4	1	1'-6"	0'-10"	1'-6"
	K	–	–	–	–	–		K	–	–	–	–	–
	L	3	8	3'-3"	0'-3"	0'-3"		L	3	8	3'-3"	0'-3"	0'-3"
	M	4	4	2'-1"	–	–		M	4	4	2'-1"	–	–
	N	4	10	3'-2"	3'-2"	3'-2"		N	4	16	3'-2"	3'-2"	3'-2"
	O	–	–	–	–	–		O	–	–	–	–	–
	P	4	2	VARIES	–	–		P	4	2	VARIES	–	–

* SEE DIAGRAM FOR DIMENSIONS

CITY OF ALLEN
DEPARTMENT OF ENGINEERING

REINFORCING STEEL SCHEDULE
4,6,8 AND 10 FEET INLETS

STANDARD CONSTRUCTION DETAILS
STORM DRAINAGE

DATE: JULY 1991

REV DATE: MARCH 2015

SHEET : SD-D11

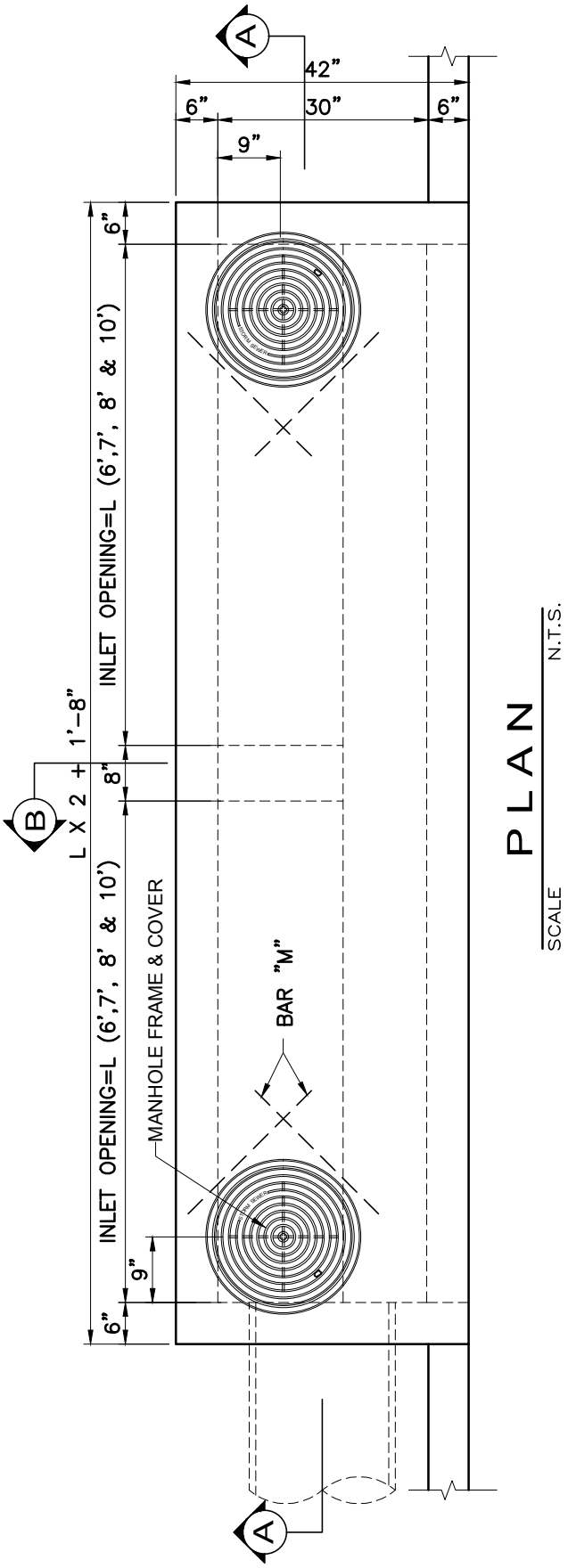

PLAN

SCALE N.T.S.

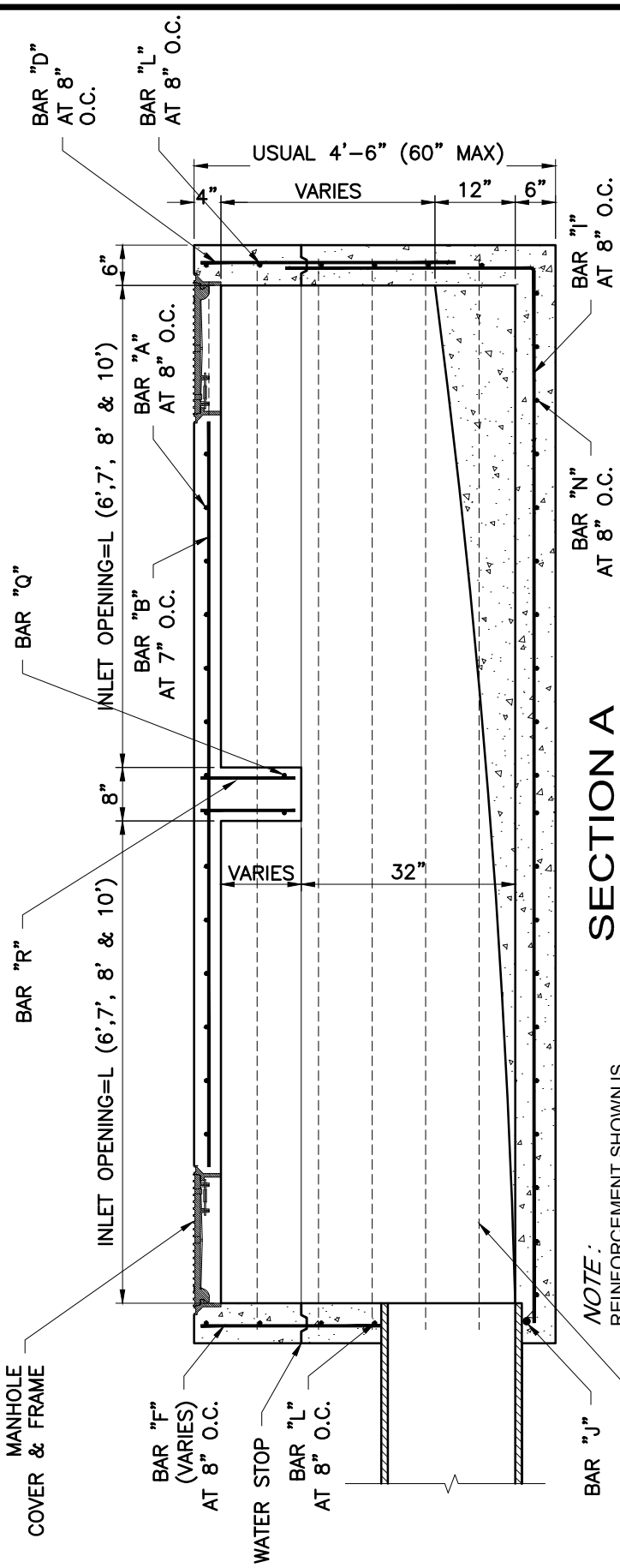

SECTION A

SCALE N.T.S.

NOTE: REINFORCEMENT SHOWN IS ADDITIONAL FOR SPECIAL CONDITION, FOR REMAINDER OF REINFORCEMENT SEE SECTIONS.

CITY OF ALLEN
DEPARTMENT OF ENGINEERING

12,14,16 AND 20 FEET INLETS

STANDARD CONSTRUCTION DETAILS
STORM DRAINAGE

DATE:	REV DATE:	SHEET :
JULY 1991	APRIL 2015	SD-D12

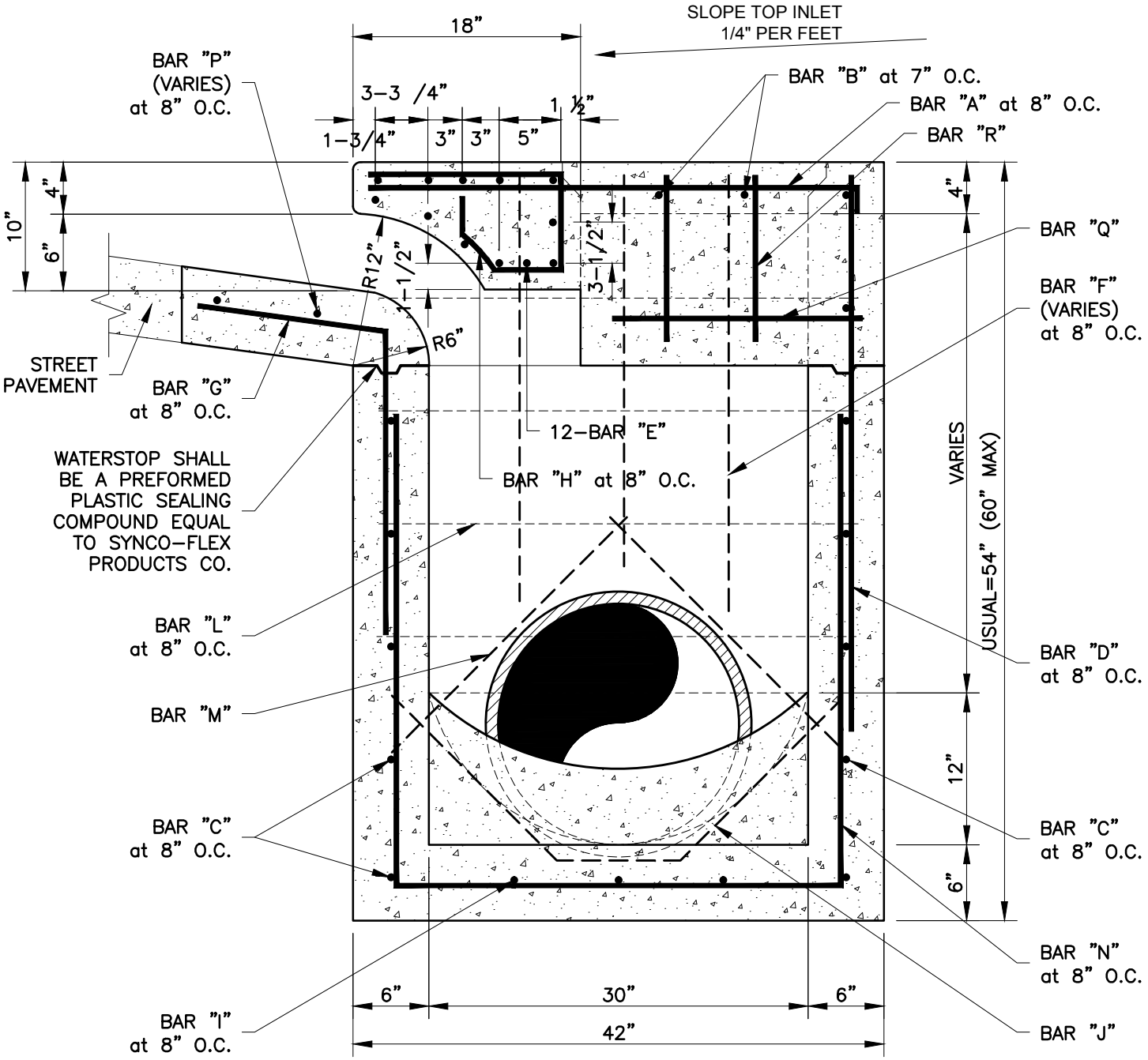

TYPICAL SECTION B

SCALE 1"=12"

CITY OF ALLEN DEPARTMENT OF ENGINEERING	TYPICAL SECTION B STANDARD RECESSED & CURB INLET (12,14,16 AND 20 FEET INLETS)	STANDARD CONSTRUCTION DETAILS STORM DRAINAGE	
		DATE: JULY 1991	REV DATE: APRIL 2015	SHEET : SD-D13

REINFORCING STEEL SCHEDULE
DIMENSIONS SHOWN ARE FOR MAXIMUM SIZE INLET

INLET LENGTH	BAR TYPE	BAR DIA. (#/8")	NO. REQ'D.	BAR DIMENSIONS			INLET LENGTH	BAR TYPE	BAR DIA. (#/8")	NO. REQ'D.	BAR DIMENSIONS		
				A	B	C					A	B	C
12'	A	3	14	3'-2"	0'-3"	–	16'	A	3	20	3'-2"	0'-3"	–
	B	3	2	9'-4"	–	–		B	3	2	13'-4"	–	–
	C	4	12	13'-4"	0'-3"	0'-3"		C	4	12	17'-4"	0'-3"	0'-3"
	D	4	23	3'-8"	–	–		D	4	29	3'-8"	–	–
	E	5	12	13'-4"	–	–		E	5	12	17'-4"	–	–
	F	4	3	VARIES	–	–		F	4	3	VARIES	–	–
	G	3	20	1'-3"	2'-0"	–		G	3	26	1'-3"	2'-0"	–
	H	3	20	*	*	*		H	3	26	*	*	*
	I	4	3	13'-4"	3'-2"			I	4	3	17'-4"	3'-2"	
	J	4	1	1'-6"	0'-10"	1'-6"		J	4	1	1'-6"	0'-10"	1'-6"
	K	–	–	–	–	–		K	–	–	–	–	–
	L	3	8	3'-3"	0'-3"	0'-3"		L	3	8	3'-3"	0'-3"	0'-3"
	M	4	6	2'-1"	–	–		M	4	6	2'-1"	–	–
	N	4	20	3'-2"	3'-2"	3'-2"		N	4	26	3'-2"	3'-2"	3'-2"
	O	–	–	–	–	–		O	–	–	–	–	–
	P	4	2	VARIES	–	–		P	4	2	VARIES	–	–
	Q	3	2	1'-8"	–	–		Q	3	2	1'-8"	–	–
	R	3	4	1'-3"	–	–		R	3	4	1'-3"	–	–
14'	A	3	18	3'-2"	0'-3"	–	20'	A	3	26	3'-2"	0'-3"	–
	B	3	2	11'-4"	–	–		B	3	2	17'-4"	–	–
	C	4	12	15'-4"	0'-3"	0'-3"		C	4	12	21'-4"	0'-3"	0'-3"
	D	4	27	3'-8"	–	–		D	4	35	3'-8"	–	–
	E	5	12	15'-4"	–	–		E	5	12	21'-4"	–	–
	F	4	3	VARIES	–	–		F	4	3	VARIES	–	–
	G	3	24	1'-3"	2'-0"	–		G	3	32	1'-3"	2'-0"	–
	H	3	24	*	*	*		H	3	32	*	*	*
	I	4	3	15'-4"	3'-2"			I	4	3	21'-4"	3'-2"	
	J	4	1	1'-6"	0'-10"	1'-6"		J	4	1	1'-6"	0'-10"	1'-6"
	K	–	–	–	–	–		K	–	–	–	–	–
	L	3	8	3'-3"	0'-3"	0'-3"		L	3	8	3'-3"	0'-3"	0'-3"
	M	4	6	2'-1"	–	–		M	4	6	2'-1"	–	–
	N	4	24	3'-2"	3'-2"	3'-2"		N	4	32	3'-2"	3'-2"	3'-2"
	O	–	–	–	–	–		O	–	–	–	–	–
	P	4	2	VARIES	–	–		P	4	2	VARIES	–	–
	Q	3	2	1'-8"	–	–		Q	3	2	1'-8"	–	–
	R	3	4	1'-3"	–	–		R	3	4	1'-3"	–	–

* SEE DIAGRAM FOR DIMENSIONS

CITY OF ALLEN
DEPARTMENT OF ENGINEERING

REINFORCING STEEL SCHEDULE
12,14,16 AND 20 FEET INLETS

STANDARD CONSTRUCTION DETAILS
STORM DRAINAGE

DATE: JULY 1991

REV DATE: AUG. 2006

SHEET : SD-D14

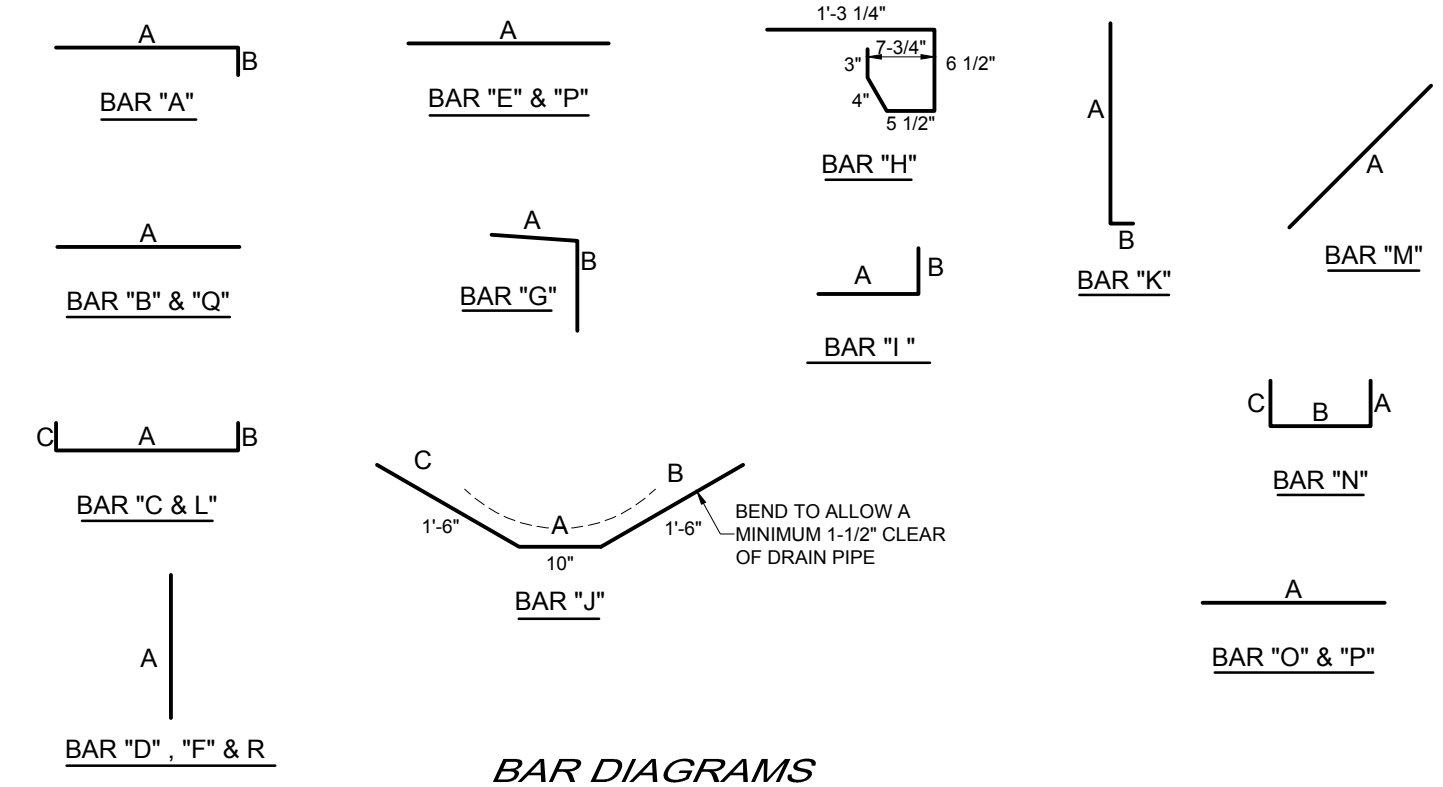

BAR DIAGRAMS

SCALE N.T.S.

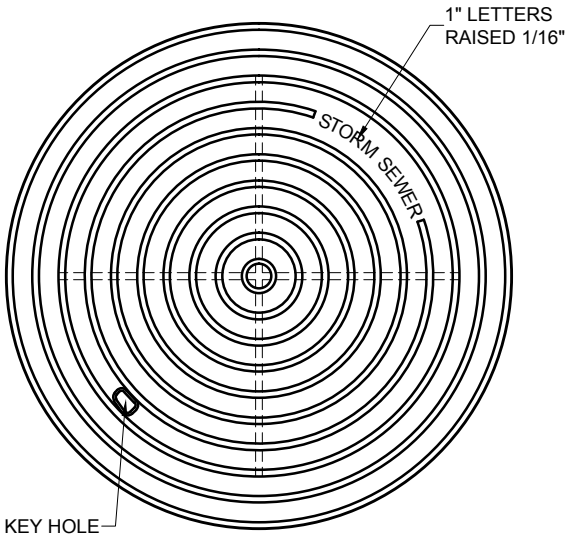

PLAN

SCALE N.T.S.

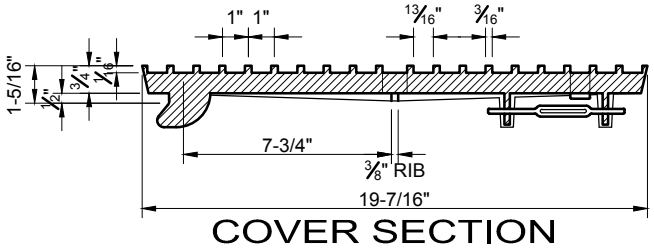

COVER SECTION

SCALE N.T.S.

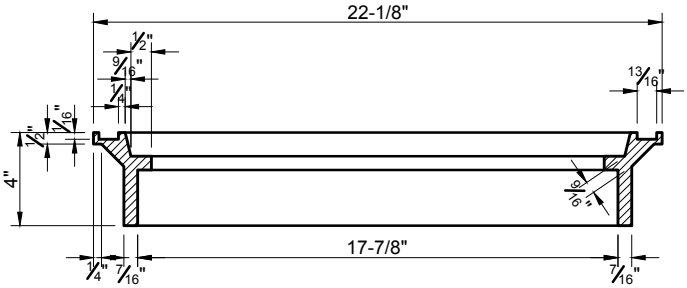

FRAME SECTION

SCALE N.T.S.

NOTE :

ALL CAST IRON FITTINGS SHALL BE DOMESTIC.

CITY OF ALLEN DEPARTMENT OF ENGINEERING	BAR DIAGRAMS AND INLET FRAME & COVER DETAIL	STANDARD CONSTRUCTION DETAILS STORM DRAINAGE	
		DATE: JULY 1991	REV DATE: MARCH 2015	SHEET : SD-D15

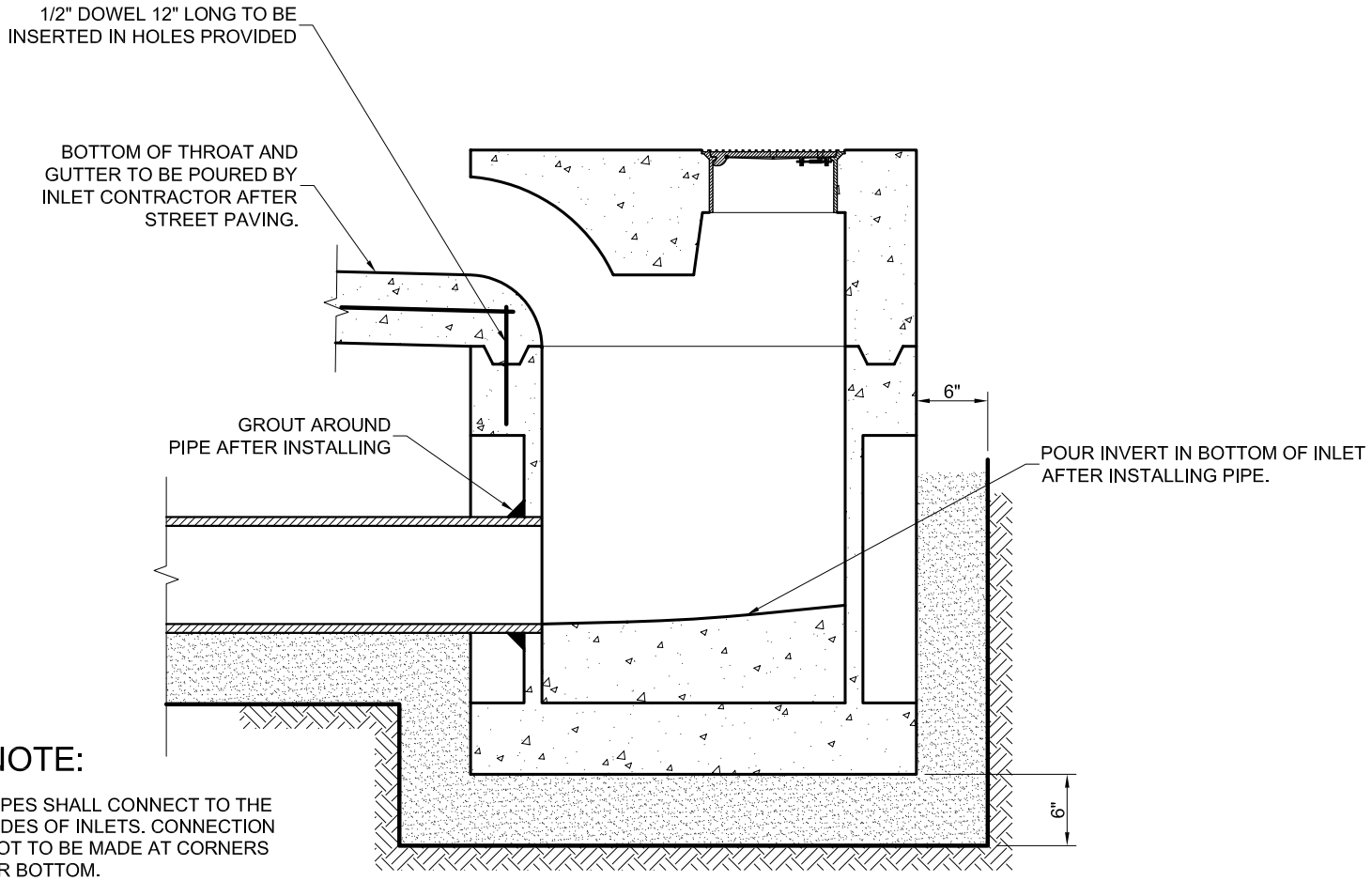

NOTE:

PIPES SHALL CONNECT TO THE SIDES OF INLETS. CONNECTION NOT TO BE MADE AT CORNERS OR BOTTOM.

PRECAST INLETS MUST BE APPROVED BY CITY ENGINEER.

INSTALLATION DRAWING FOR PRECAST 5' AND 10' CURB INLETS

NOTES FOR PRECAST INLET

1. THE FLOOR OF THE EXCAVATION MUST PROVIDE A FIRM, LEVEL BED FOR THE BASE SECTION TO REST UPON.
2. A MINIMUM OF 6" OF 1"DIAMETER (MAX.) ROCK OR GRAVEL SHALL BE USED TO PREPARE THE BEDDING TO FINAL GRADE OR IN LIEU OF THIS, THAT AT LEAST 6" OF 2 SACK CEMENT STABILIZED SAND BE USED TO PREPARE THE BEDDING TO GRADE. CEMENT STABILIZED SAND TO BE ALLOWED TO SET BY KEEPING HOLE PUMPED DRY.
3. AFTER CASTING HAS BEEN INSTALLED ON THE PROPER BEDDING, THE BACKFILL MATERIAL, WHICH IS FREE FLOWING AND CLEAR OF ROCKS IN EXCESS OF 4" DIAMETER AND OTHER LUMPS WHICH WOULD PROHIBIT PROPER COMPACTION, SHALL BE COMMENCED IN LIFTS OF NO MORE THAN 18". THE MATERIAL USED FOR BACKFILL SHOULD BE OF A TYPE SUITABLE TO OBTAIN THE DENSITY REQUIREMENTS FOR THE SPECIFIC JOB.

CITY OF ALLEN DEPARTMENT OF ENGINEERING	PRECAST CURB INLET	STANDARD CONSTRUCTION DETAILS STORM DRAINAGE		
		DATE: JULY 1991	REV DATE: AUG. 2006	SHEET : SD-D16

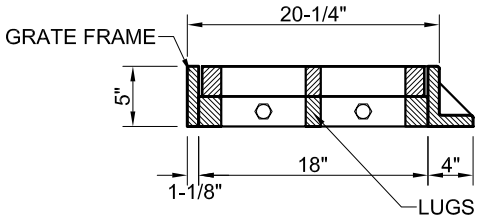

SECTION A

SCALE N.T.S.

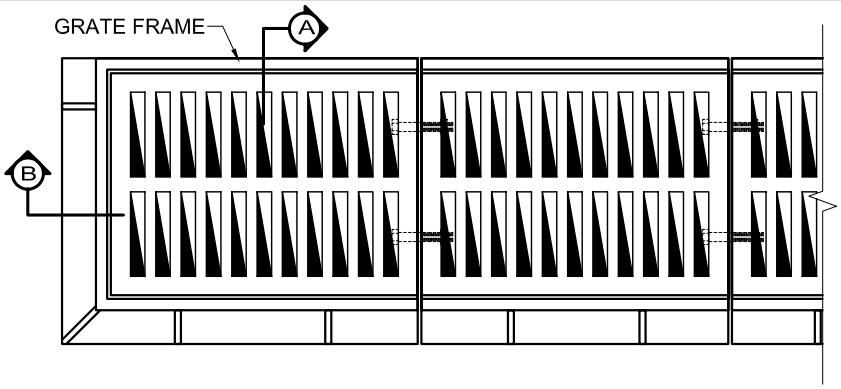

PLAN

SCALE N.T.S.

NOTES :

1. ALL LAPS AND EXTENSION OF REINFORCING BARS SHALL BE 36 BAR IN DIAMETERS UNLESS NOTED OTHERWISE.
2. TACK WELD GRATES IN PLACE.
3. PIPE MAYBE PLACED IN ANY WALL, BUT
4. SHALL NOT ENTER ANY CORNER OR BOTTOM.
5. GRATE AND FRAME SHALL BE PATTERN No. 814AS MANUFACTURED BY BASS & HAYES FOUNDRY, INC. OR APPROVED EQUAL.
6. ALL CAST IRON FITTINGS SHALL BE DOMESTIC.

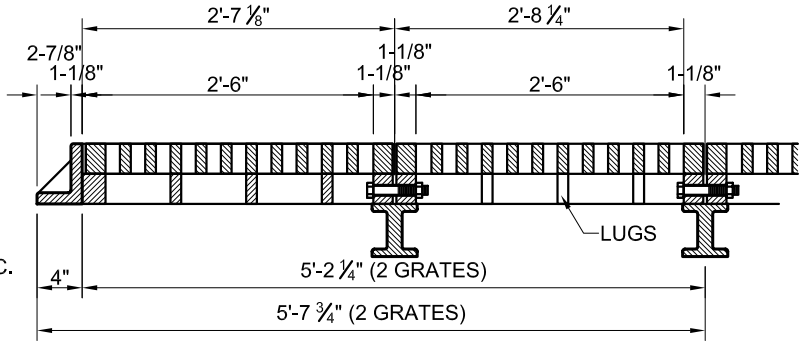

SECTION B

SCALE N.T.S.

BARS "K" 4/8"Ø

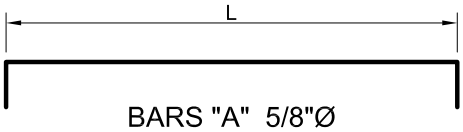

BARS "A" 5/8"Ø

TWO GRATE INLET , L=5'-10 1/4"
THREE GRATE INLET , L=8'-6 1/2"
FOUR GRATE INLET , L=11'-2 3/4"

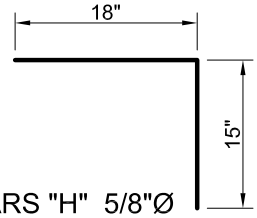

BARS "H" 5/8"Ø

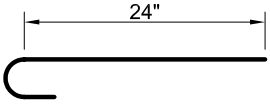

BARS "B" 5/8"Ø

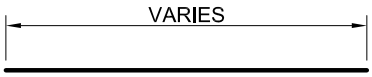

BARS "I" 4/8"Ø

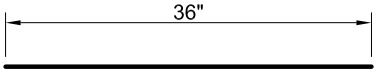

BARS "C" 3/8"Ø

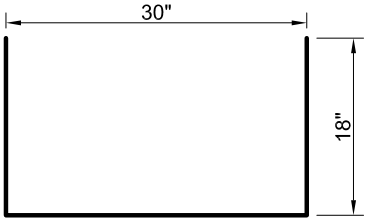

BARS "J" 4/8"Ø

CITY OF ALLEN DEPARTMENT OF ENGINEERING	COMBINATION INLETS GRATE DETAILS AND BAR DIAGRAMS	STANDARD CONSTRUCTION DETAILS STORM DRAINAGE		
		DATE: JULY 1991	REV DATE: AUG. 2006	SHEET : SD-D17

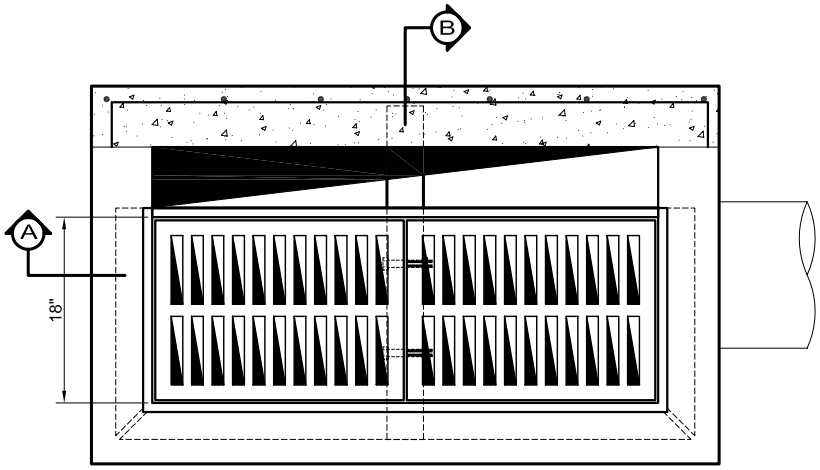

PLAN

SCALE N.T.S.

NOTES :

1. COMBINATION INLETS TO BE USE IN ALL ALLEYS WHERE INLETS ARE REQUIRED.
2. ALL LAPS AND EXTENSION OF REINFORCING BARS SHALL BE 36 BAR DIAMETERS UNLESS NOTED OTHERWISE.
3. TACK WELD GRATES IN PLACE.
4. PIPE MAY BE PLACED IN ANY WALL, BUT SHALL NOT ENTER ANY CORNER OR BOTTOM.
5. ALL CAST IRON FITTINGS SHALL BE DOMESTIC.

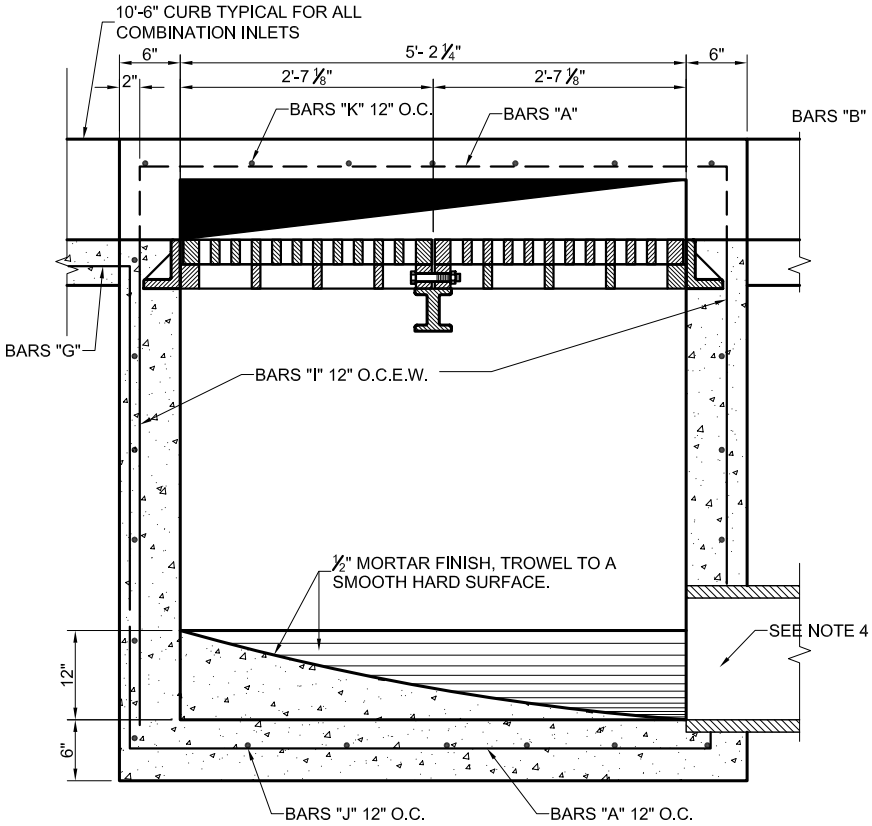

SECTION A

SCALE N.T.S.

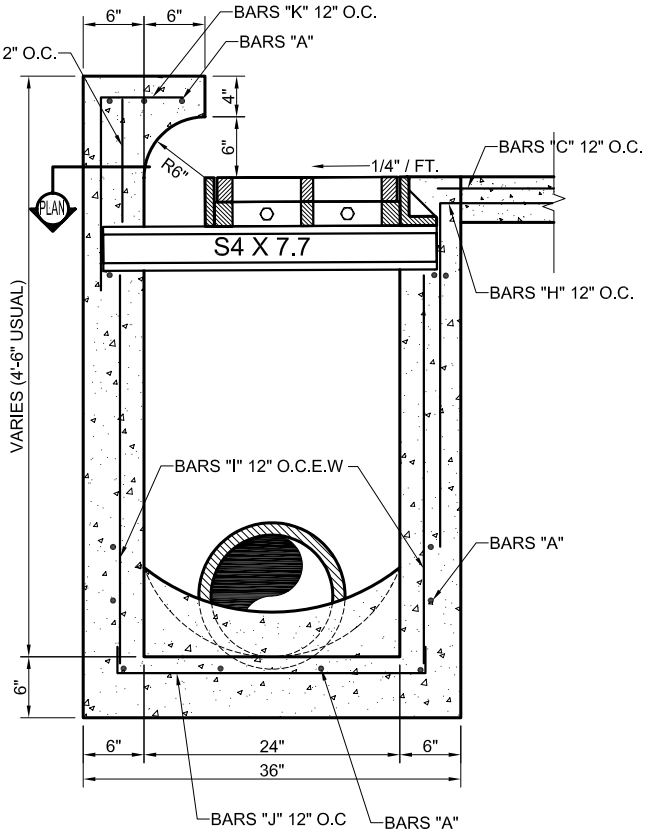

SECTION B

SCALE N.T.S.

CITY OF ALLEN

DEPARTMENT OF ENGINEERING

COMBINATION INLET
TWO GRATE INLET

STANDARD CONSTRUCTION DETAILS
STORM DRAINAGE

DATE:	REV DATE:	SHEET :
JULY 1991	AUG. 2006	SD-D18

CITY OF ALLEN
DEPARTMENT OF ENGINEERING

COMBINATION INLET
THREE GRATE INLET

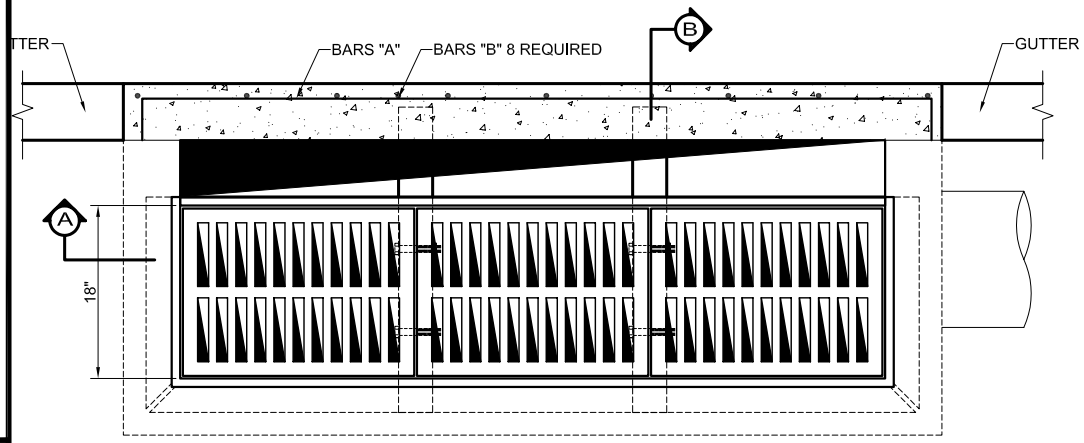

PLAN
SCALE N.T.S.

NOTES :

1. COMBINATION INLETS TO BE USE IN ALL ALLEYS WHERE INLETS ARE REQUIRED.
2. ALL LAPS AND EXTENSION OF REINFORCING BARS SHALL BE 36 BAR DIAMETERS UNLESS NOTED OTHERWISE.
3. TACK WELD GRATES IN PLACE.
4. PIPE MAY BE PLACED IN ANY WALL, BUT SHALL NOT ENTER ANY CORNER OR BOTTOM.
5. ALL CAST IRON FITTINGS SHALL BE DOMESTIC.

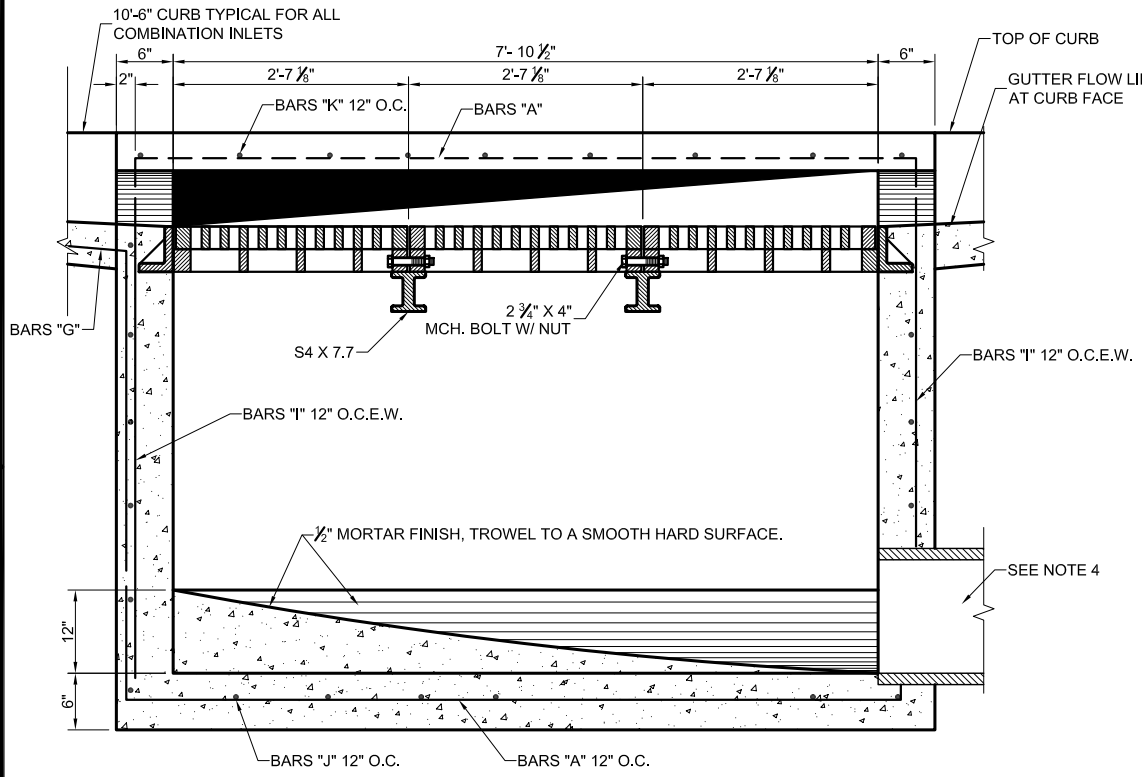

SECTION A
SCALE N.T.S.

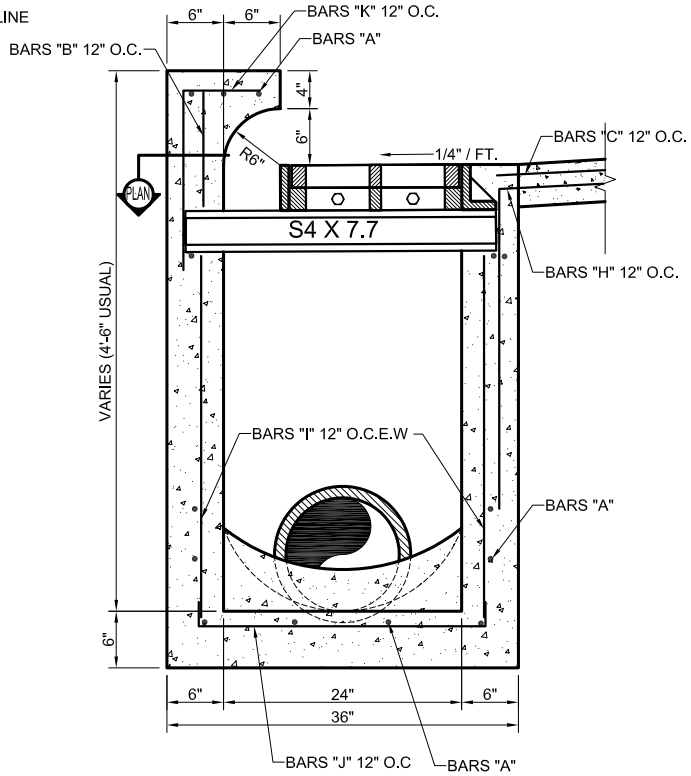

SECTION B
SCALE N.T.S.

STANDARD CONSTRUCTION DETAILS
STORM DRAINAGE

DATE: JULY 1991

REV DATE: AUG. 2006

SHEET : SD-D19

CITY OF ALLEN
DEPARTMENT OF ENGINEERING

COMBINATION INLET
FOUR GRATE INLET

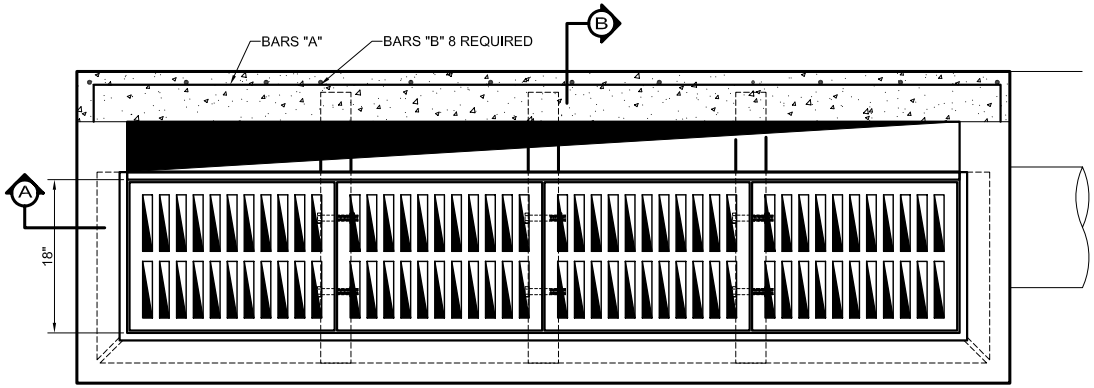

PLAN
SCALE N.T.S.

NOTES :

1. COMBINATION INLETS TO BE USE IN ALL ALLEYS WHERE INLETS ARE REQUIRED.
2. ALL LAPS AND EXTENSION OF REINFORCING BARS SHALL BE 36 BAR DIAMETERS UNLESS NOTED OTHERWISE.
3. TACK WELD GRATES IN PLACE.
4. PIPE MAY BE PLACED IN ANY WALL, BUT SHALL NOT ENTER ANY CORNER OR BOTTOM.
5. ALL CAST IRON FITTINGS SHALL BE DOMESTIC.

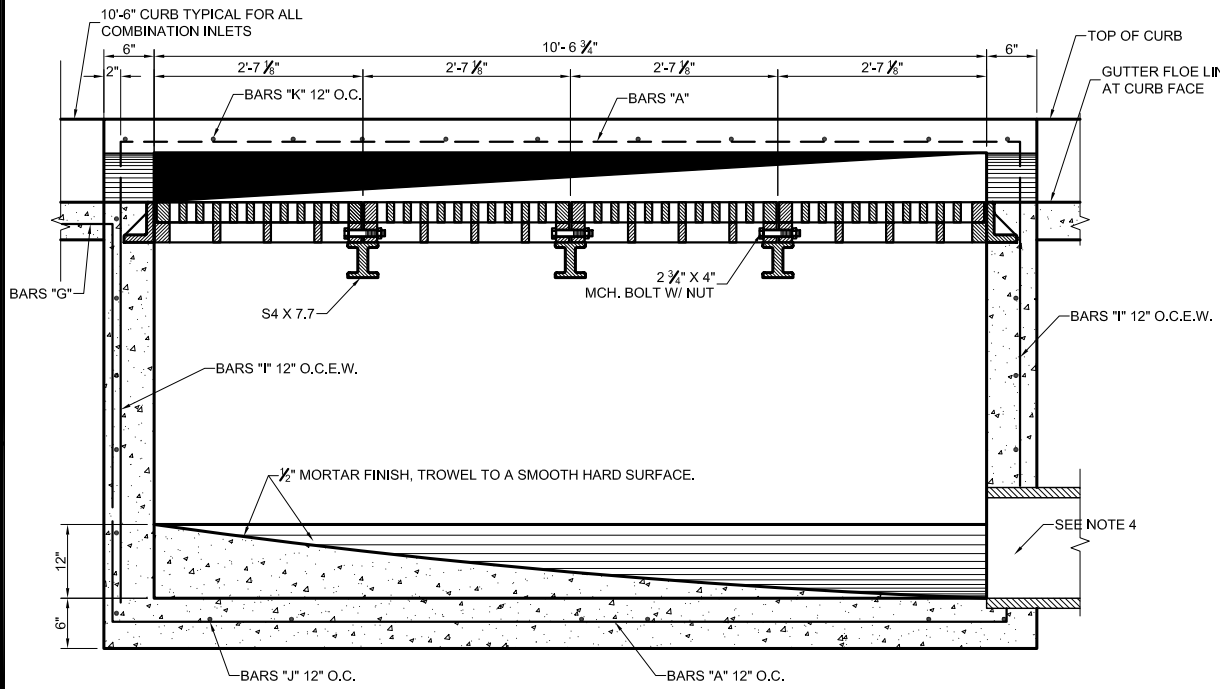

SECTION A
SCALE N.T.S.

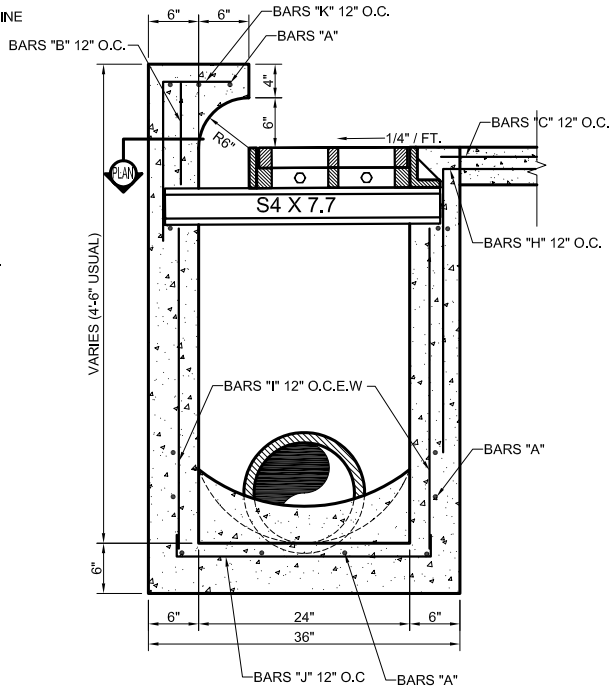

SECTION B
SCALE N.T.S.

STANDARD CONSTRUCTION DETAILS
STORM DRAINAGE

DATE: JULY 1991

REV DATE: AUG. 2006

SHEET : SD-D20

CITY OF ALLEN
DEPARTMENT OF ENGINEERING

TWO GRATE INLET

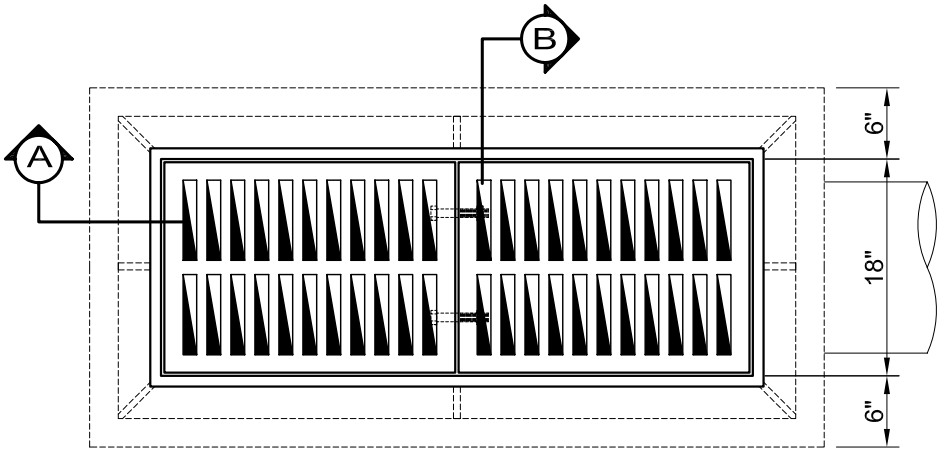

PLAN
SCALE N.T.S.

NOTES :

1. ALL LAPS AND EXTENSION OF REINFORCING BARS SHALL BE 36 BAR DIAMETERS UNLESS NOTED OTHERWISE.
2. TACK WELD GRATES IN PLACE.
3. PIPE MAY BE PLACED IN ANY WALL, BUT SHALL NOT ENTER ANY CORNER OR BOTTOM.
4. ALL CAST IRON FITTINGS SHALL BE DOMESTIC.

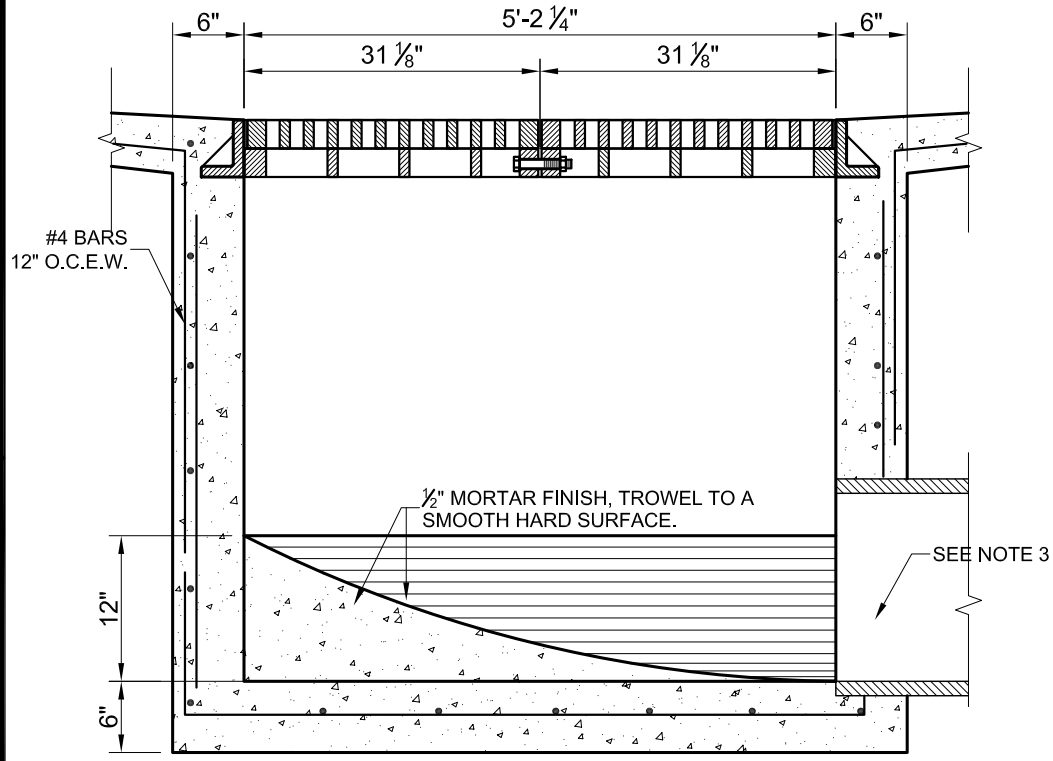

SECTION A
SCALE N.T.S.

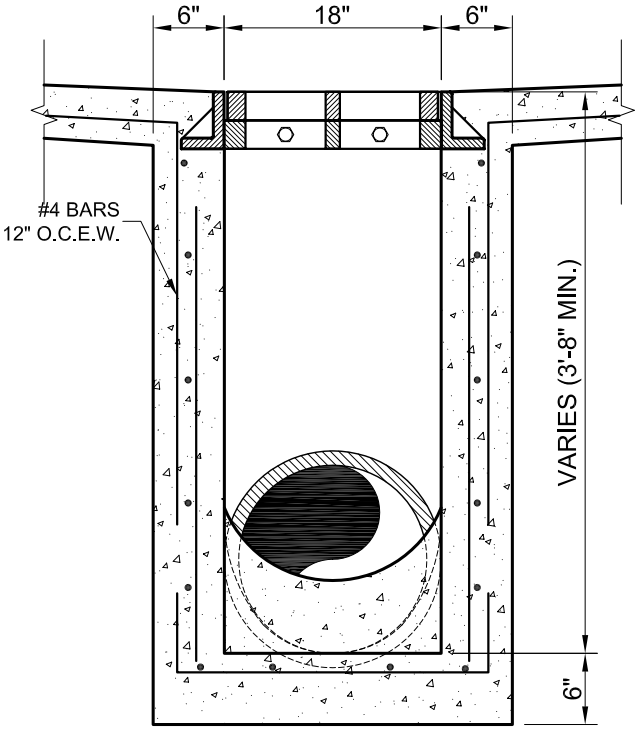

SECTION B
SCALE N.T.S.

STANDARD CONSTRUCTION DETAILS
STORM DRAINAGE

DATE: JULY 1991
REV DATE: AUG. 2006
SHEET : SD-D21

CITY OF ALLEN
DEPARTMENT OF ENGINEERING

THREE GRATE INLET

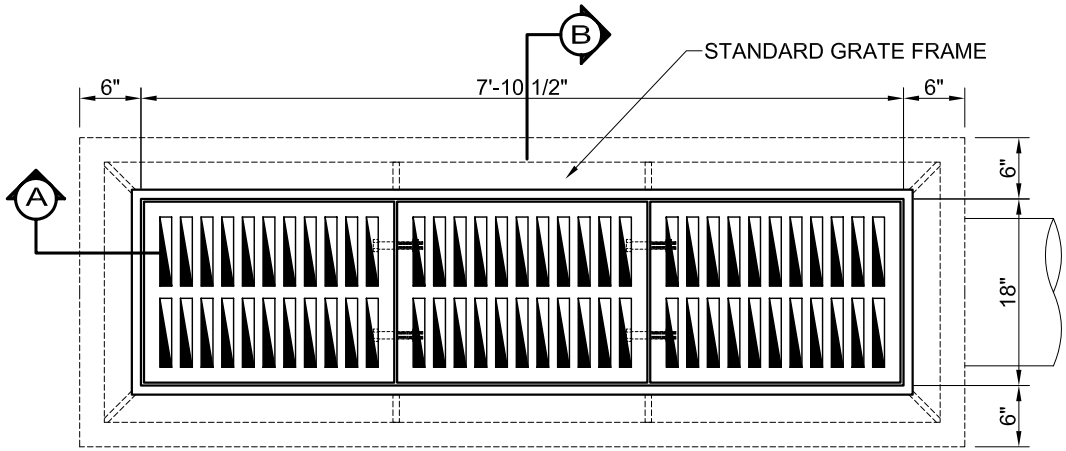

PLAN

SCALE N.T.S.

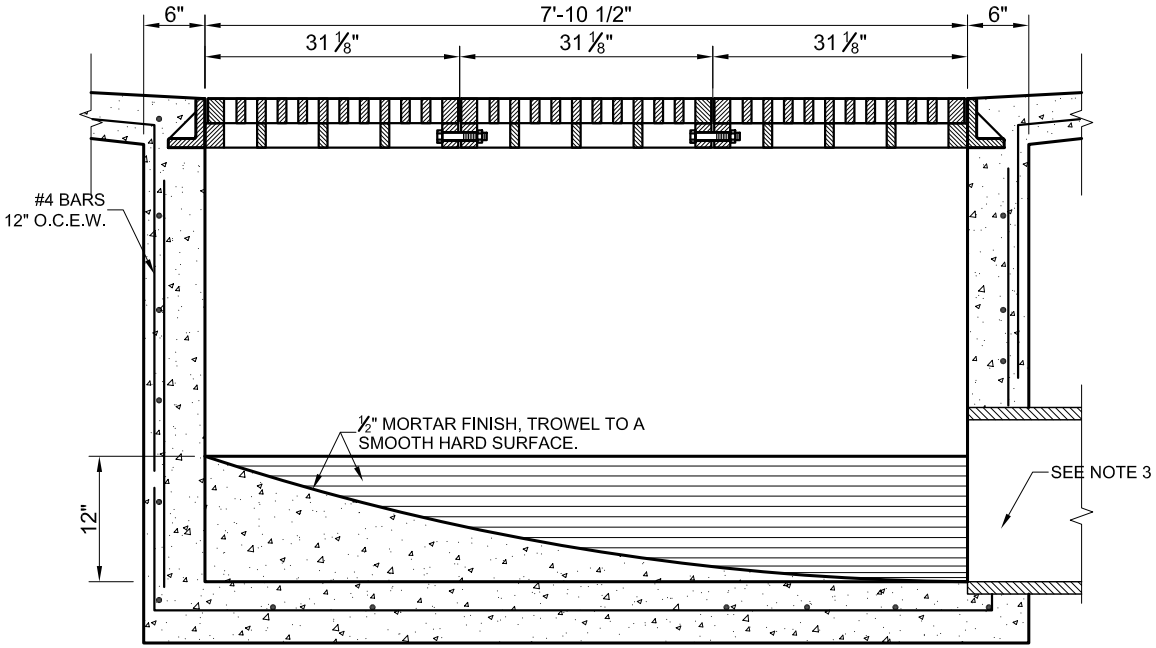

SECTION A

SCALE N.T.S.

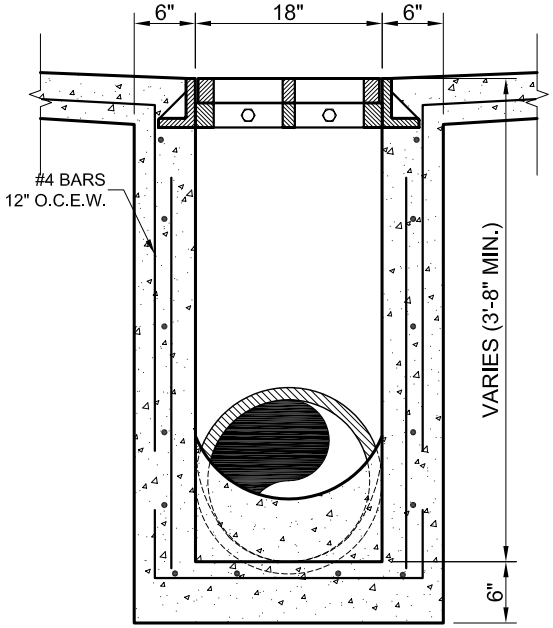

SECTION B

SCALE N.T.S.

NOTES :

1. ALL LAPS AND EXTENSION OF REINFORCING BARS SHALL BE 36 BAR DIAMETERS UNLESS NOTED OTHERWISE.
2. TACK WELD GRATES IN PLACE.
3. PIPE MAY BE PLACED IN ANY WALL, BUT SHALL NOT ENTER ANY CORNER OR BOTTOM.
4. ALL CAST IRON FITTINGS SHALL BE DOMESTIC.

STANDARD CONSTRUCTION DETAILS
STORM DRAINAGE

DATE: JULY 1991

REV DATE: AUG. 2006

SHEET : SD-D22

CITY OF ALLEN
DEPARTMENT OF ENGINEERING

FOUR GRATE INLET

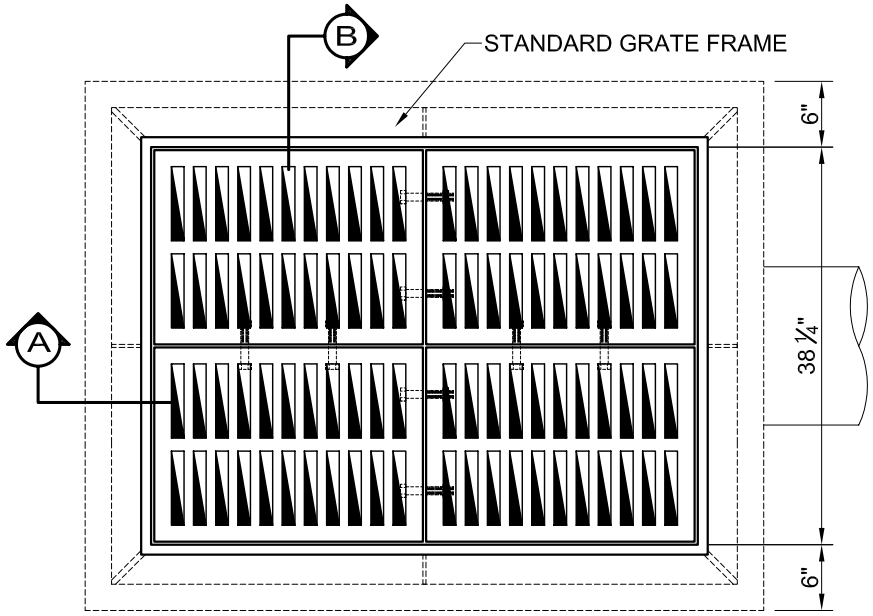

PLAN

SCALE N.T.S.

NOTES :

1. ALL LAPS AND EXTENSION OF REINFORCING BARS SHALL BE 36 BAR DIAMETERS UNLESS NOTED OTHERWISE.
2. TACK WELD GRATES IN PLACE.
3. PIPE MAY BE PLACED IN ANY WALL, BUT SHALL NOT ENTER ANY CORNER OR BOTTOM.
4. ALL CAST IRON FITTINGS SHALL BE DOMESTIC.

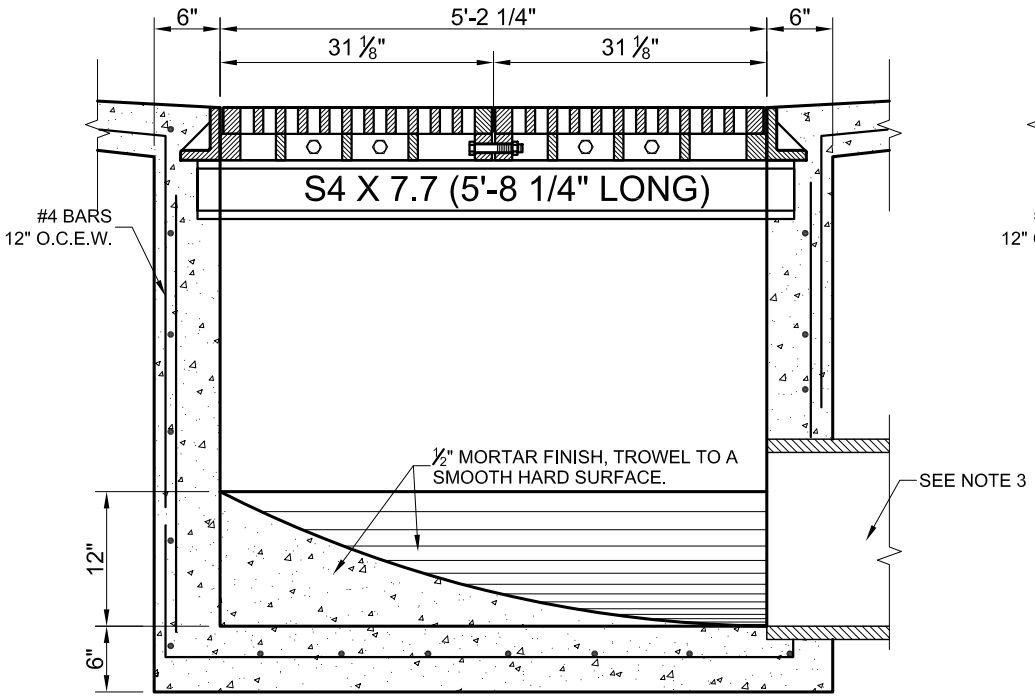

SECTION A

SCALE N.T.S.

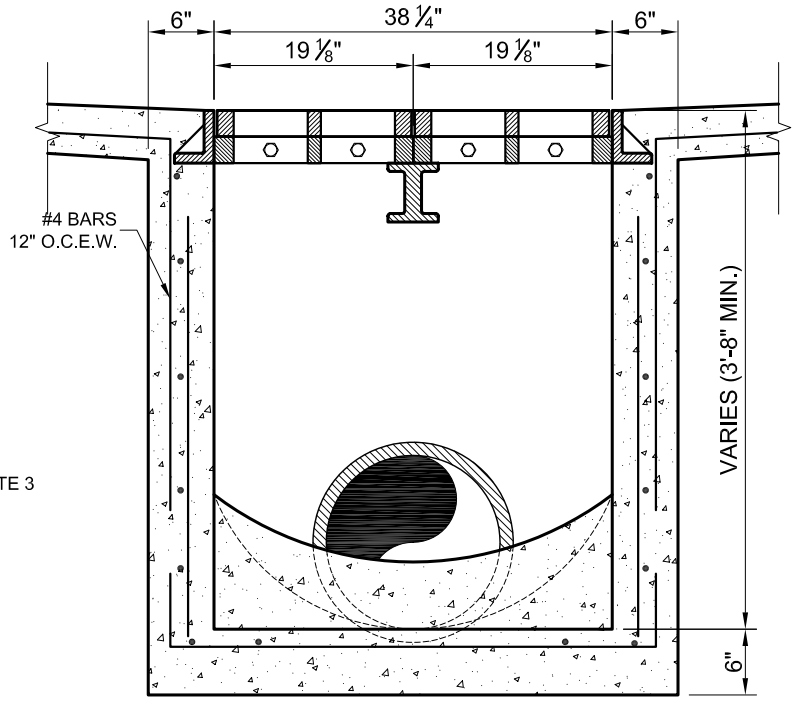

SECTION B

SCALE N.T.S.

STANDARD CONSTRUCTION DETAILS
STORM DRAINAGE

DATE: JULY 1991

REV DATE: AUG. 2006

SHEET : SD-D23

CITY OF ALLEN
DEPARTMENT OF ENGINEERING

SIX GRATE INLET

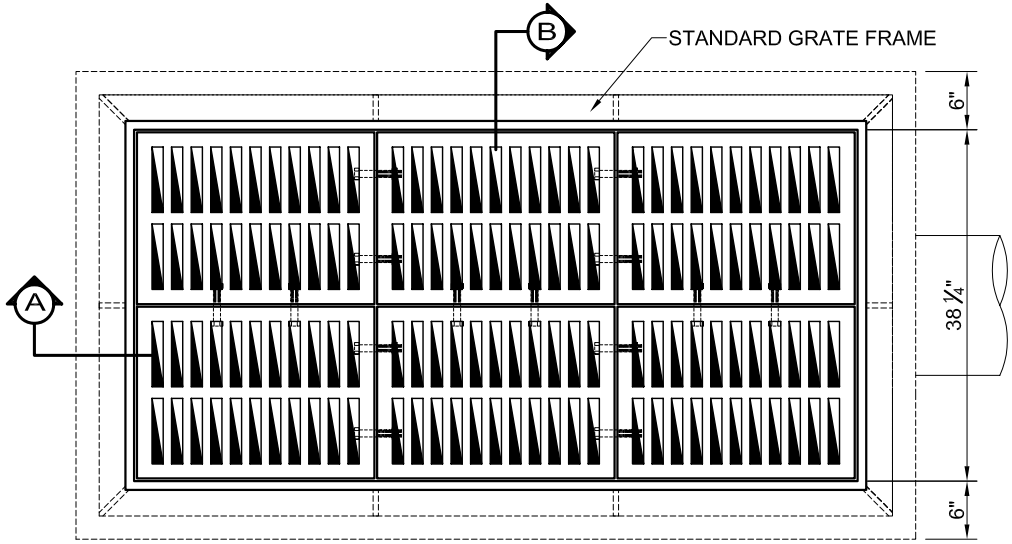

PLAN

SCALE N.T.S.

NOTES :

1. ALL LAPS AND EXTENSION OF REINFORCING BARS SHALL BE 36 BAR DIAMETERS UNLESS NOTED OTHERWISE.
2. TACK WELD GRATES IN PLACE.
3. PIPE MAY BE PLACED IN ANY WALL, BUT SHALL NOT ENTER ANY CORNER OR BOTTOM.
4. ALL CAST IRON FITTINGS SHALL BE DOMESTIC.

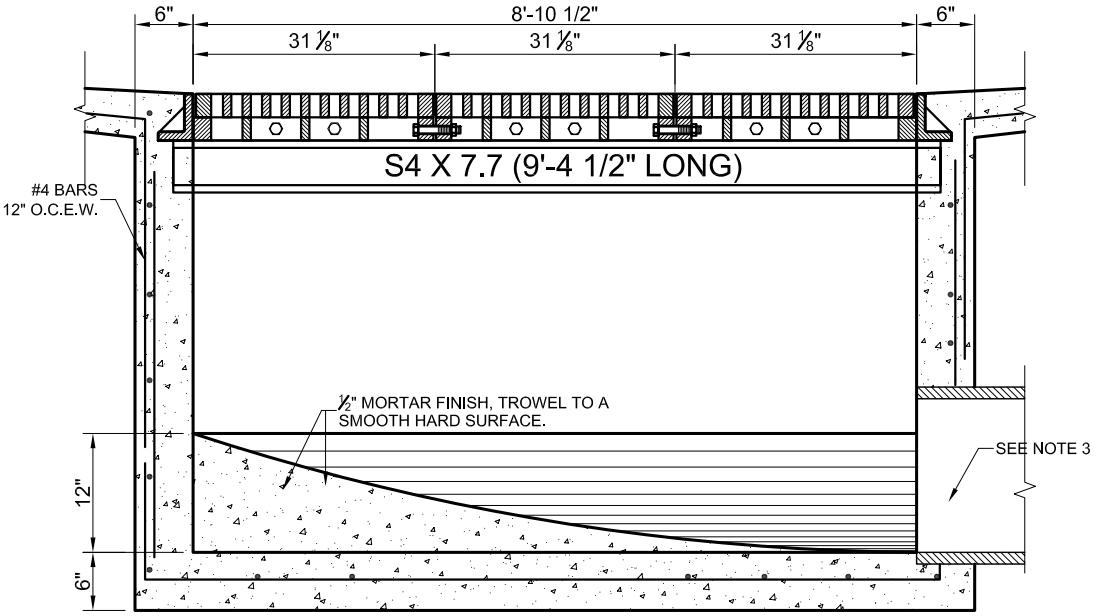

SECTION A

SCALE N.T.S.

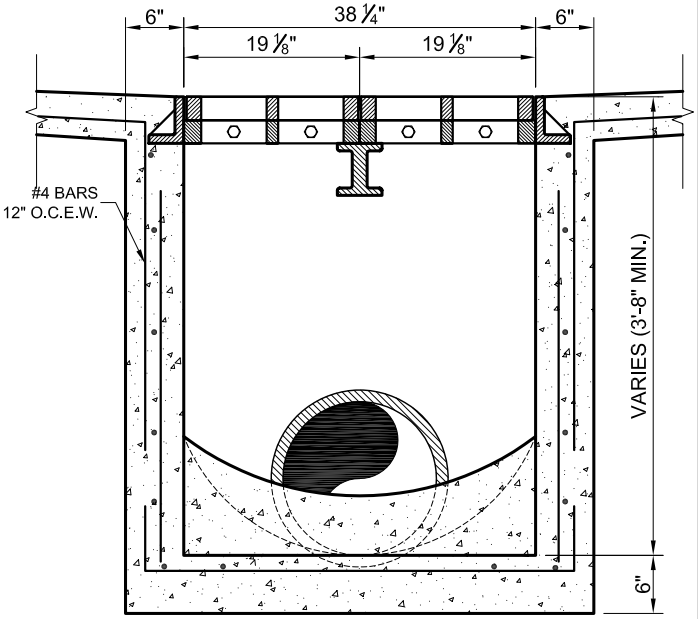

SECTION B

SCALE N.T.S.

STANDARD CONSTRUCTION DETAILS
STORM DRAINAGE

DATE: JULY 1991

REV DATE: AUG. 2006

SHEET : SD-D24

CITY OF ALLEN
DEPARTMENT OF ENGINEERING

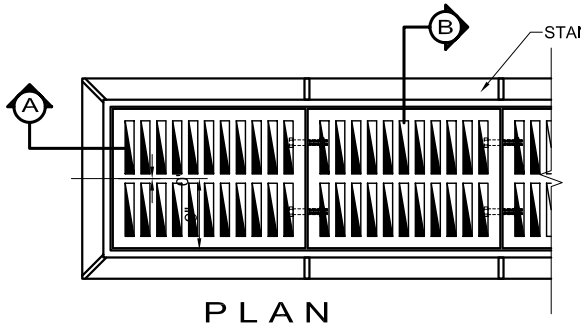

PLAN
SCALE N.T.S.

NOTES :

1. GRATE AND FRAME SHALL BE PATTERN No. 814 AS MANUFACTURED BY BASS AND HAYES FOUNDRY OR APPROVED EQUAL.
2. ALL CAST IRON FITTINGS SHALL BE DOMESTIC.

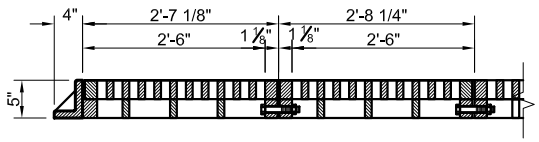

SECTION A
SCALE N.T.S.

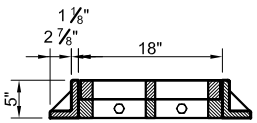

SECTION B
SCALE N.T.S.

GRATE DETAIL

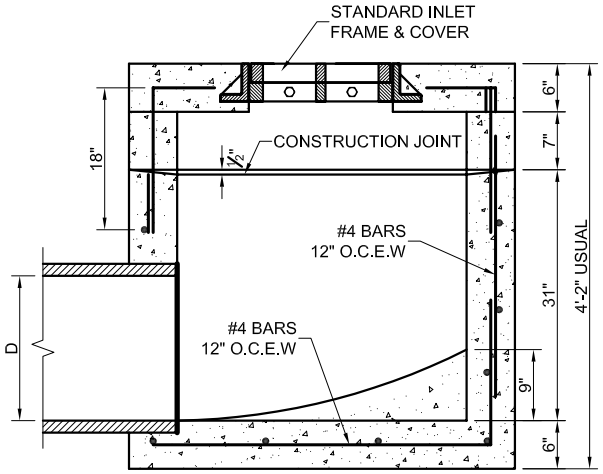

SECTION C
SCALE N.T.S.

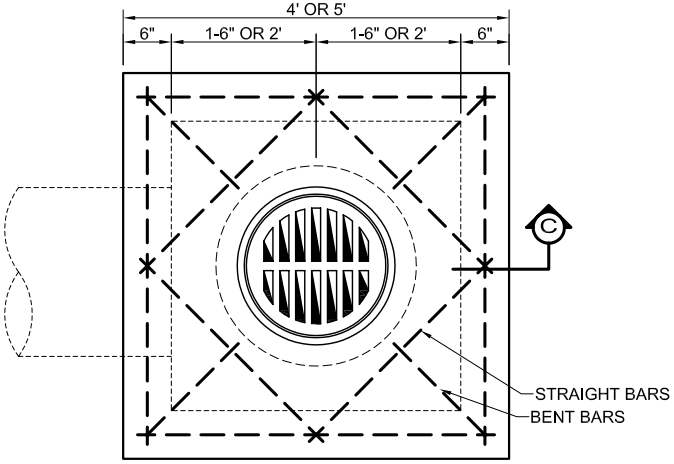

PLAN
SCALE N.T.S.

STANDARD DROP INLET

GRATE DETAIL
STANDARD DROP INLET

STANDARD CONSTRUCTION DETAILS
STORM DRAINAGE

DATE: JULY 1991

REV DATE: AUG. 2006

SHEET : SD-D25

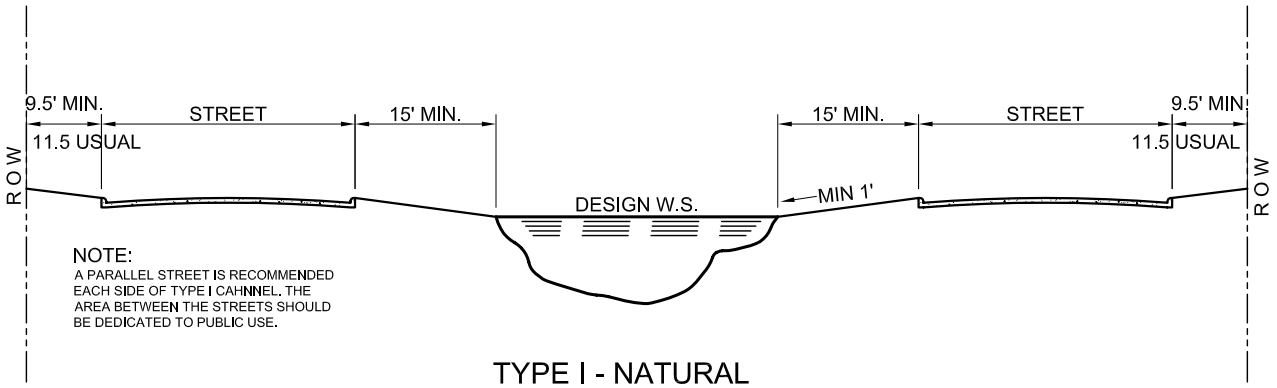

TYPE I - NATURAL

SCALE N.T.S.

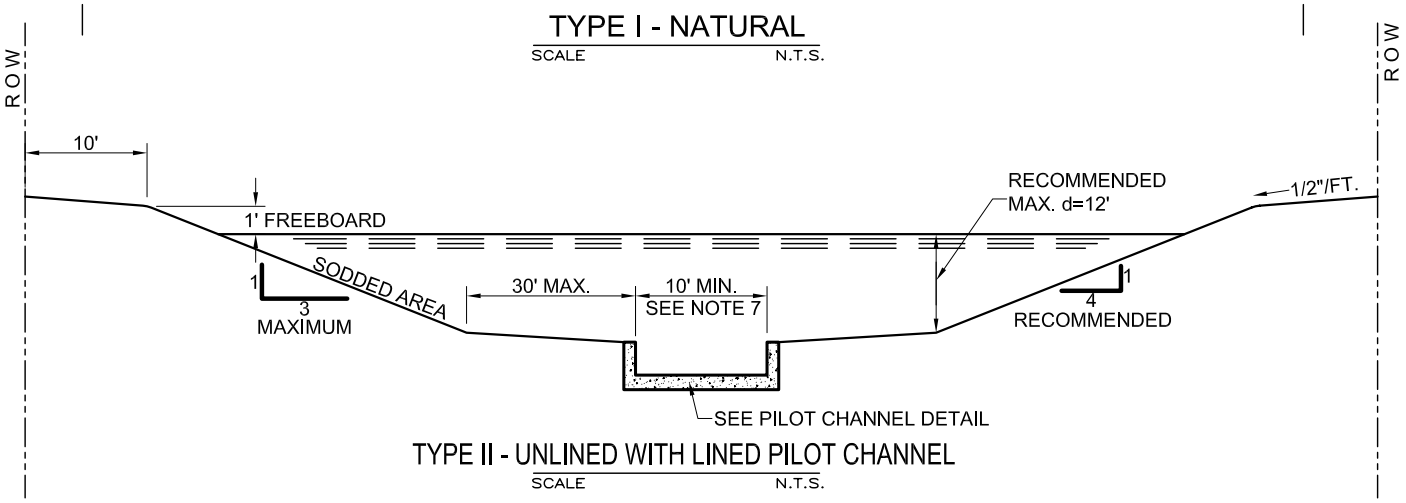

TYPE II - UNLINED WITH LINED PILOT CHANNEL

SCALE N.T.S.

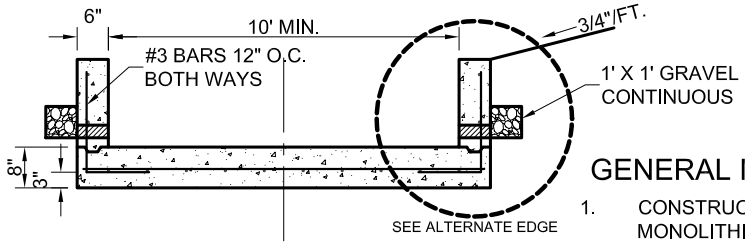

PILOT CHANNEL DETAIL

SCALE N.T.S.

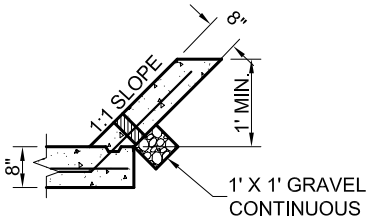

ALTERNATE EDGE

SCALE N.T.S.

GENERAL NOTES FOR OPEN CHANNELS

1. CONSTRUCTION JOIONT SHOWN FOR CONVENIENCE ONLY. MONOLITHIC CONSTRUCTION MAYBE USED.
2. ALL VISIBLE SURFACES SHALL BE TROWEL FINISH.
3. ALL REINFORCING STEEL SHALL BE 3/8" DIAMETER AND SPACED 12" C TO C BOTH WAYS UNLESS OTHERWISE SPECIFIED.
4. TYPE I CHANNEL, A NATURAL CHANNEL, IS SHOWN FOR LOCATION OF ADJUSCENT STREETS.
5. IF WOOD FORMS ARE USED WITH CONSTRUCTION JOINT, THEY SHALL BE TWO, 2" X 4" AND SHALL NOT BE REMOVED UNTIL CONCRETE ON SLOPES IS READY TO BE PLACED.
6. ALL CONCRETE IN LINED CHANNEL SHALL BE CLASS "A"
7. FLAT BOTTOM TO BE CONSTRUCTED WHEN CHANNEL WIDTH IS LESS THAN 12'.
8. 3/4" CHAMPER ON ALL CONCRETE CORNERS.
9. GRASS COVER REQUIRED FOR ALL SLOPES 3:1 OR FLATTER. CONCRETE RIP-RAP REQUIRED ON SLOPES STEEPER THAN 3:1.

CITY OF ALLEN DEPARTMENT OF ENGINEERING	TYPE I & TYPE II CHANNEL SECTION	STANDARD CONSTRUCTION DETAILS STORM DRAINAGE		
		DATE: JULY 1991	REV DATE: AUG. 2006	SHEET : SD-D026

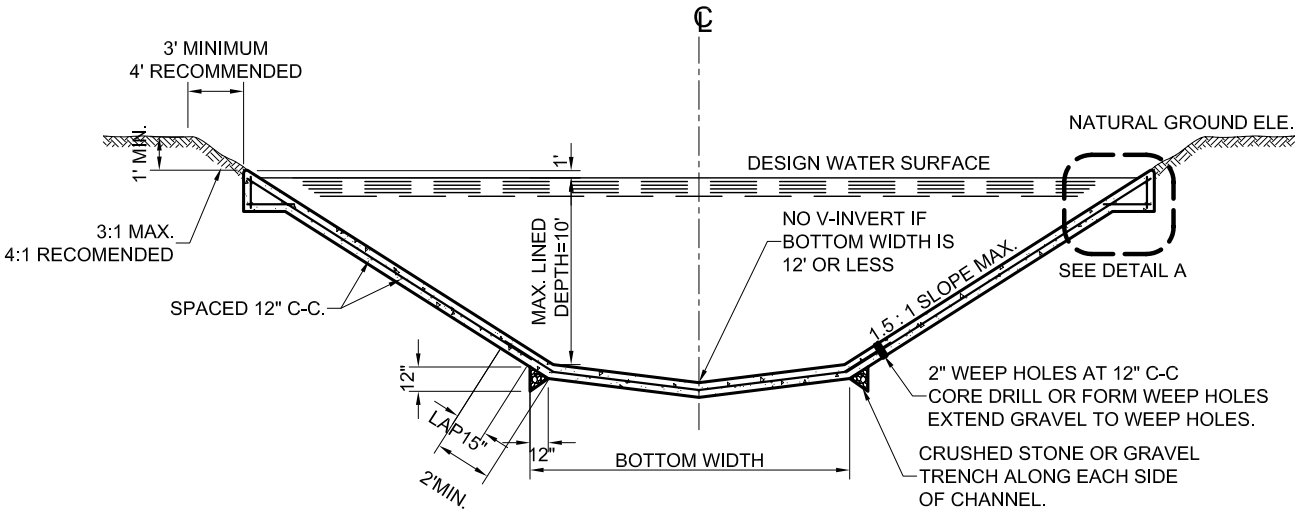

CHANNEL SECTION

SCALE N.T.S.

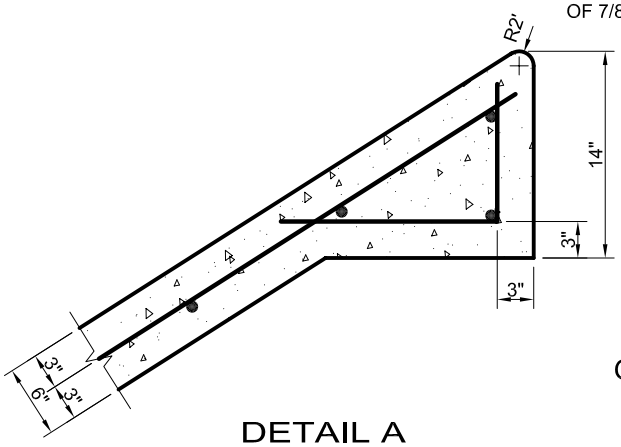

DETAIL A

SCALE N.T.S.

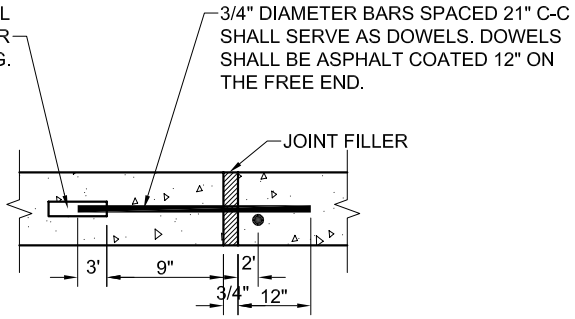

TRANSVERSE EXPANSION JOINT

SCALE N.T.S.

GENERAL NOTES FOR OPEN CHANNELS

1. CONSTRUCTION JOIONT SHOWN FOR CONVENIENCE ONLY. MONOLITHIC CONSTRUCTION MAYBE USED.
2. ALL VISIBLE SURFACES SHALL BE TROWEL FINISH.
3. ALL REINFORCING STEEL SHALL BE 3/8" DIAMETER AND SPACED 12" C TO C BOTH WAYS UNLESS OTHERWISE SPECIFIED.
4. IF WOOD FORMS ARE USED WITH CONSTRUCTION JOINT, THEY SHALL BE TWO, 2" X 4" AND SHALL NOT BE REMOVED UNTIL CONCRETE ON SLOPES IS READY TO BE PALCED.
5. ALL CONCRETE IN LINED CHANNEL SHALL BE CLASS "A"
6. FLAT BOTTOM TO BE CONSTRUCTED WHEN CHANNEL WIDTH IS LESS THAN 12'.
7.
8. 3/4" CHAMPER ON ALL CONCRETE CORNERS.
9. GRASS COVER REQUIRED FOR ALL SLOPES 3:1 OR FLATTER. CONCRETE RIP-RAP REQUIRED ON SLOPES STEEPER THAN 3:1.

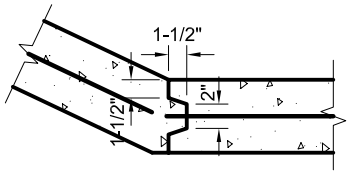

CONSTRUCTION JOINT (OPTIONAL)

SCALE N.T.S.

CITY OF ALLEN DEPARTMENT OF ENGINEERING	TYPE III NORMAL CHANNEL SECTION	STANDARD CONSTRUCTION DETAILS STORM DRAINAGE	
		DATE: JULY 1991	REV DATE: AUG. 2006	SHEET : SD-D027

OUTLET FROM PIPES HEADWALLS NEED TO HAVE ADEQUATE EROSION PROTECTION

USE FORMULA L=0.37 VD

L=LENGTH OF APRON (FT), V=OUTLET VELOCITY FLOW (FPS), D=DIAMETER OF PIPE (FT)

A) 2 - 5 FPS SOD PROTECTION AT THE OUTLET.
B) 5 - 8 FPS DRY RIP-RAP (TYPE B, ITEM # 803.3 NCTCOG)
C) 8 - 11 FPS DRY RIP-RAP (TYPE B, ITEM # 803.3 NCTCOG)
D) 11 - 18 FPS GROUTED RIP-RAP (TYPE B, ITEM # 803.3 NCTCOG)
E) >18 FPS ADEQUATE ENERGY DISSIPATERS

REINFORCING BARS SHALL BE #3 BARS ON 18" C-C EACH WAY

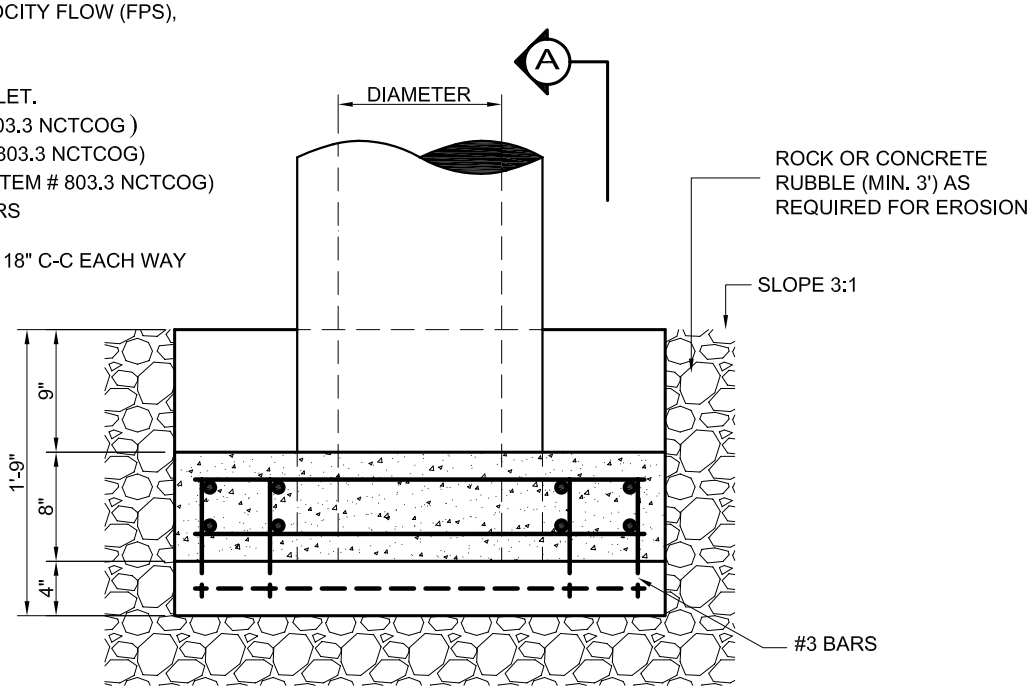

PLAN

SCALE N.T.S.

REINFORCING BARS SHALL BE #3 BARS 18" C-C EACH WAY

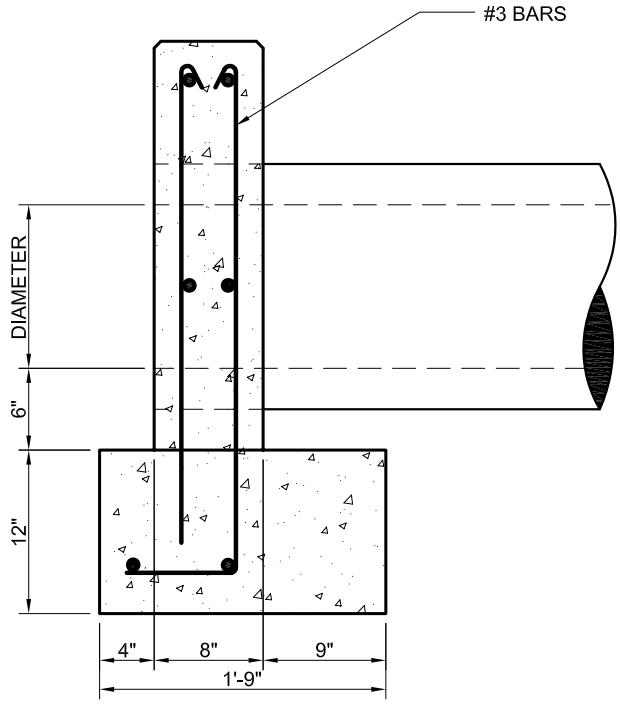

SECTION A

SCALE N.T.S.

FOR FURTHER INFORMATION, SEE TxDOT DETAILS

CITY OF ALLEN DEPARTMENT OF ENGINEERING	TYPE "A" HEADWALL	STANDARD CONSTRUCTION DETAILS STORM DRAINAGE		
		DATE: JAN 1999	REV DATE: AUG. 2006	SHEET: SD-D28

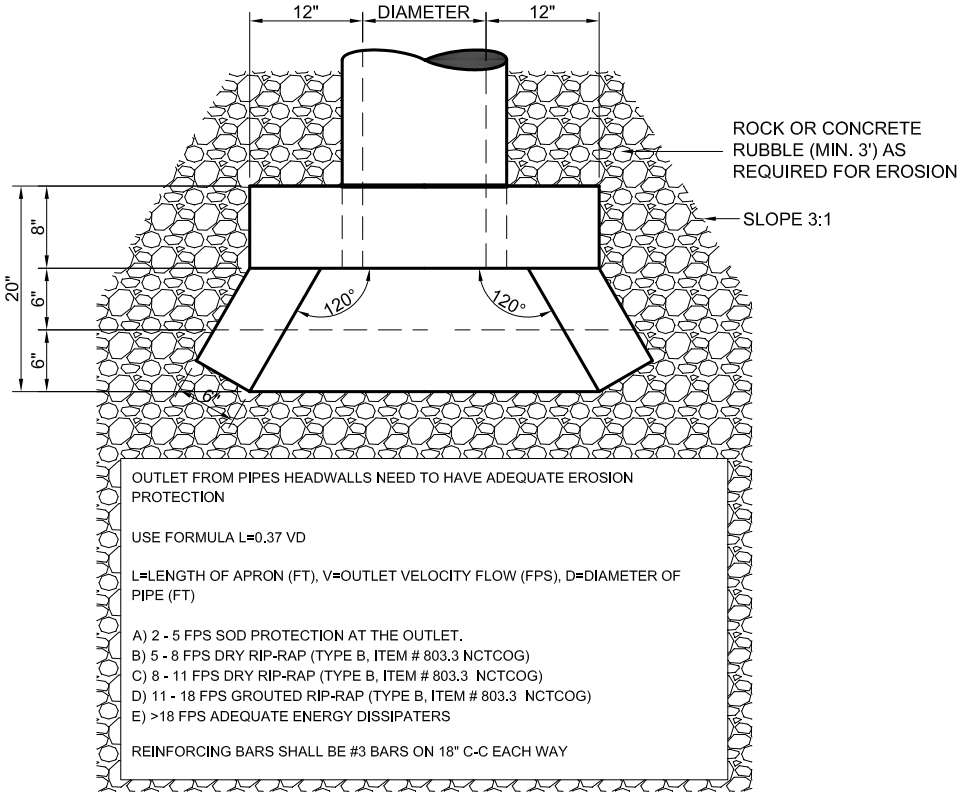

OUTLET FROM PIPES HEADWALLS NEED TO HAVE ADEQUATE EROSION PROTECTION

USE FORMULA L=0.37 VD

L=LENGTH OF APRON (FT), V=OUTLET VELOCITY FLOW (FPS), D=DIAMETER OF PIPE (FT)

A) 2 - 5 FPS SOD PROTECTION AT THE OUTLET.
B) 5 - 8 FPS DRY RIP-RAP (TYPE B, ITEM # 803.3 NCTCOG)
C) 8 - 11 FPS DRY RIP-RAP (TYPE B, ITEM # 803.3 NCTCOG)
D) 11 - 18 FPS GROUTED RIP-RAP (TYPE B, ITEM # 803.3 NCTCOG)
E) >18 FPS ADEQUATE ENERGY DISSIPATERS

REINFORCING BARS SHALL BE #3 BARS ON 18" C-C EACH WAY

PLAN

SCALE N.T.S.

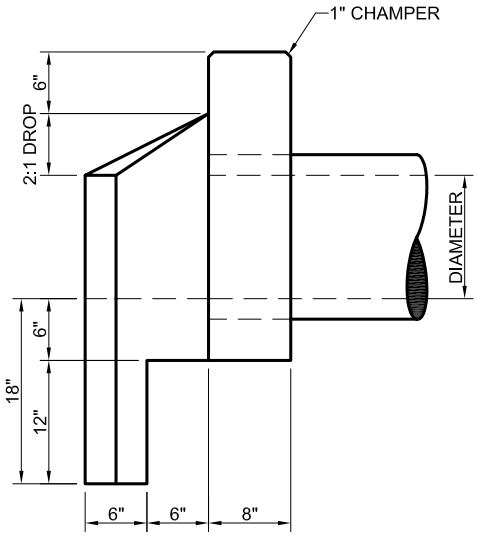

SIDE VIEW

SCALE N.T.S.

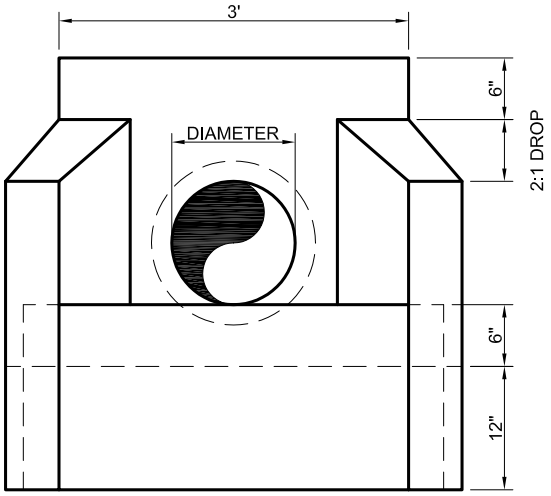

FRONT VIEW

SCALE N.T.S.

FOR FURTHER INFORMATION, SEE TxDOT DETAILS

CITY OF ALLEN DEPARTMENT OF ENGINEERING	TYPE "B" HEADWALL	STANDARD CONSTRUCTION DETAILS BRIDGE		
		DATE: JAN 1999	REV DATE: AUG. 2006	SHEET: SD-D29

OUTLET FROM PIPES HEADWALLS NEED TO HAVE ADEQUATE EROSION PROTECTION

USE FORMULA L=0.37 VD

L=LENGTH OF APRON (FT), V=OUTLET VELOCITY FLOW (FPS), D=DIAMETER OF PIPE (FT)

A) 2 - 5 FPS SOD PROTECTION AT THE OUTLET.
B) 5 - 8 FPS DRY RIP-RAP (TYPE B, ITEM # 803.3 NCTCOG)
C) 8 - 11 FPS DRY RIP-RAP (TYPE B, ITEM # 803.3 NCTCOG)
D) 11 - 18 FPS GROUTED RIP-RAP (TYPE B, ITEM # 803.3 NCTCOG)
E) >18 FPS ADEQUATE ENERGY DISSIPATERS

REINFORCING BARS SHALL BE #3 BARS ON 18" C-C EACH WAY

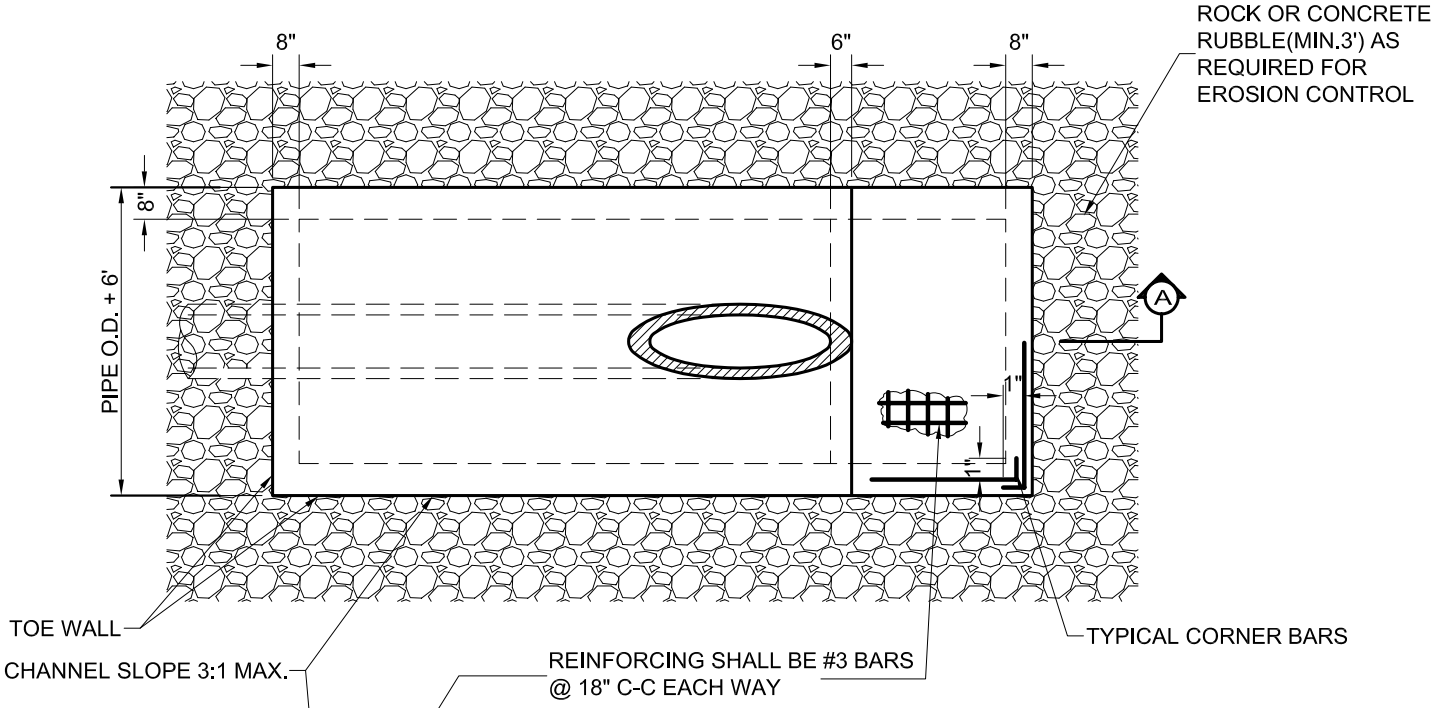

PLAN

SCALE N.T.S.

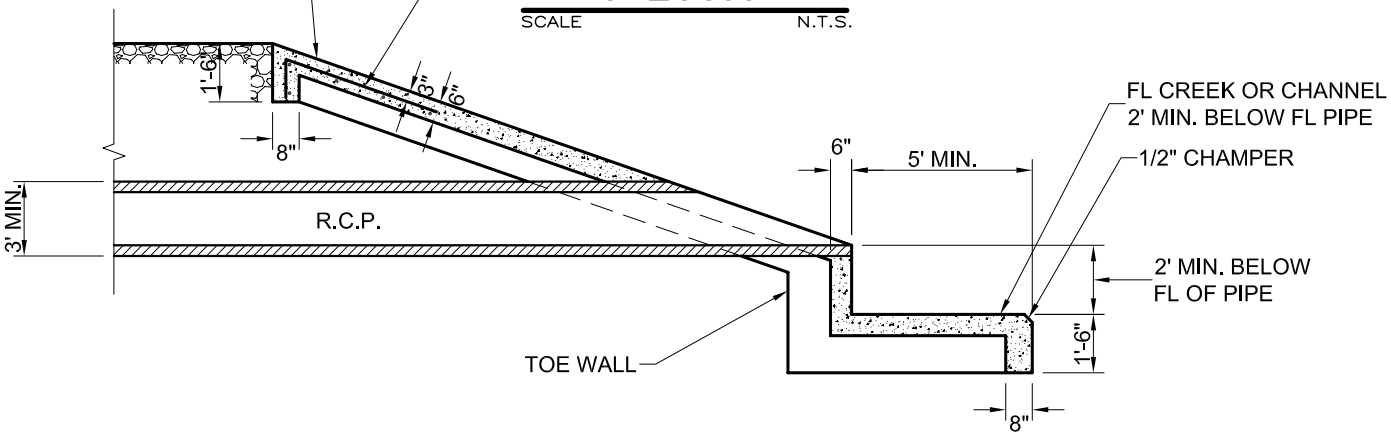

SECTION A

SCALE N.T.S.

ALL CONCRETE SHALL BE CLASS "A"

CITY OF ALLEN DEPARTMENT OF ENGINEERING	TYPE "C" HEADWALL	STANDARD CONSTRUCTION DETAILS BRIDGE		
		DATE: JAN 1999	REV DATE: AUG. 2006	SHEET: SD-D30

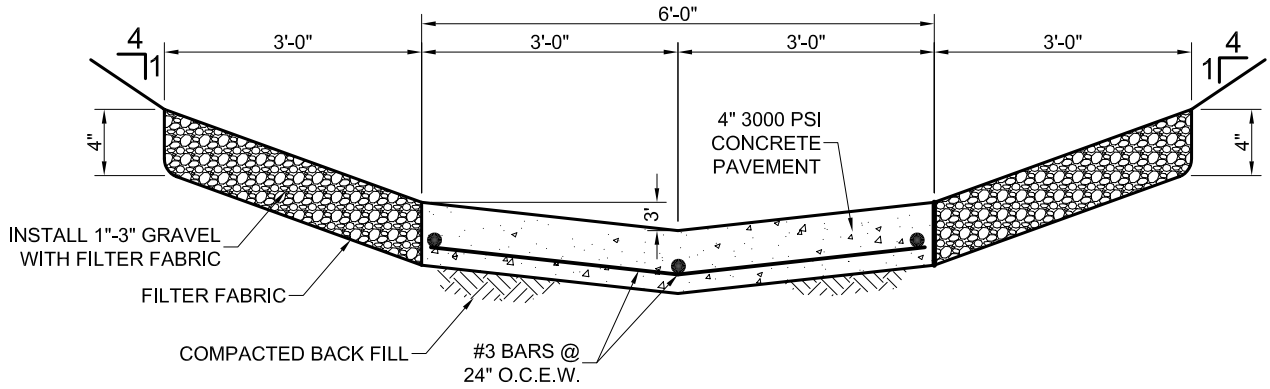

CONC. FLUME (CURBS REQUIRED AT CULVERT OUTFALL)* DETENTION POND

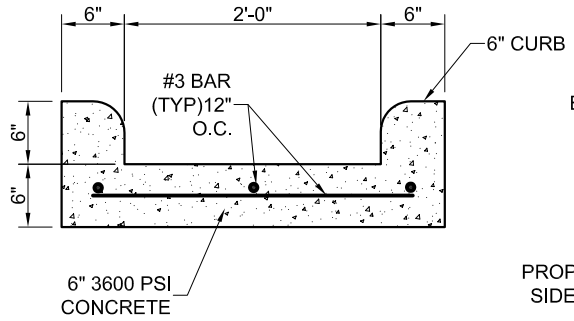

CONC. FLUME IN THE BACK OF LOTS*

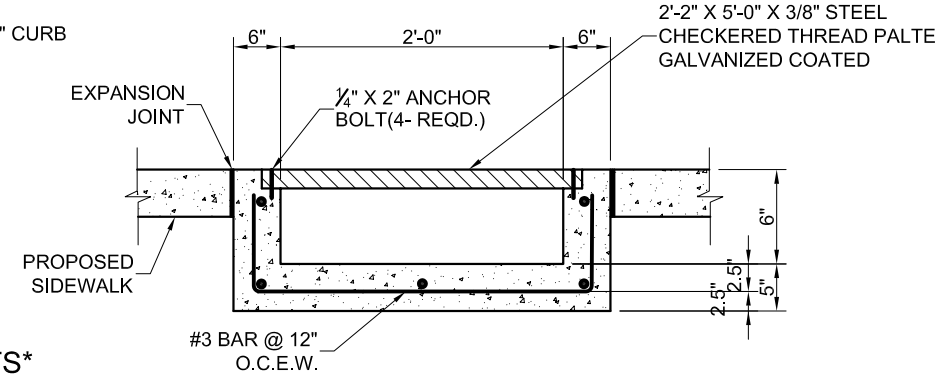

CONC. FLUME WITH GRATE COVER*

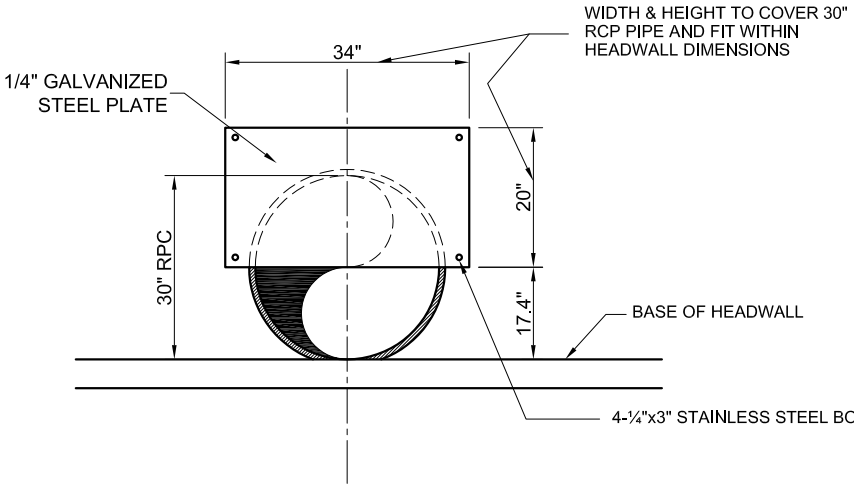

BOLT PLATE TO OUTSIDE WALL FACE OF THE PROPOSED HEADWALL WITH 1/4"x3" LONG STAINLESS STEEL BOLTS AT EACH CORNER OF PLATE 1/4" THICK GALVANIZED STEEL PLATE TO COVER WIDTH OF PIPE AS SHOWN.

RESTRICTOR PLATE DETAIL

*FOR ALL FLUMES THE MINIMUM SLOPE WILL BE 0.75%

CITY OF ALLEN DEPARTMENT OF ENGINEERING	STORM RELATED FLUMES	STANDARD CONSTRUCTION DETAILS STORM DRAINAGE		
		DATE: AUG. 2003	REV DATE: AUG. 2006	SHEET: SD-D31

STANDARD CONSTRUCTION DETAILS

EROSION CONTROL

REVISED - AUG. 2006

CITY OF ALLEN

DEPARTMENT OF ENGINEERING

NOTES : STORM WATER POLLUTION PLAN

1. All operators and/or contractors shall conform to the terms and conditions of the Texas Commision on Environmental Quality (TCEQ), TPDES General Permit No. TXR 150000 Issued and Dated March 5, 2003.

2. The Notice of Intent (NOI), as required by the General Permit, must be properly displayed on site at all times by each operator.

3. All releases of the reportable quantities of hazardous substances shall be reported immediately to the facility operator, EPA, and TCEQ.

4. Qualified operator personnel must inspect the site al least once every 14 days and 24 hours of a storm event at 0.5 inches or greater. As an alternative, an inspection can be conducted once every seven (7) calendar days on a defined day. A decision on which method to use must be decided before work begins and must be followed throughout the project.

5. Modifications to the Storm Water Pollution Prevention Plan shall be implemented and be in-place within a Seven calendar day period.

6. If any contractor sees a violation by an operator or another contractor,that operator or contractor in violation shall be notified as well as the facility operator.

7. Erosion control shall be installed prior to grading.

8. Accumulated silt deposits shall be removed from silt fences and hay bale dikes when silt depth reaches six inches or capacity has been reduced by 50%, whichever occures first. Removal of silt deposits by the contractor shall be incidental to the performance of the contract and a separate bid item shall not be included.

9. The contractor shall add or delete erosion protection at the request and direction of the Operator of the city.

10. After installation of pavement, final lot benching and general cleanup, the paving Contractor shall establish grass groundcover in all street parkways,lot and all other disturbed areas. Sodding shall be done as specified by Section 202.5 and seeding as specified by Section 200.6 of the October 2004 or Latest edition of NCTCOG Standard Specification.

11. It shall be the contractor's responsibility to control and limit silt and sediment leaving the site. Specifically, the contractor shall protect all public streets, alleys, streams and storm drainage systems from erosion deposits.

12. It shall be the contractor's responsibility to provide a dumpster (or equal) to collect solid waste materials during construction.

13. A drainage area map will be included with the Storm Sewer Pollution Plan.

14. It is anticipated that the following non-storm water discharges will be associated with this project. These discharges are authorized through the construction general permit.
    A. Fire hydrant flushing
    B. Discharge from Firefighting activities
    C. Potable water sources including waterline flushing
    D. Water used to control dust
    E. Uncontamianted ground water
    F. Air Conditioning condensate
    G. Vehicle, external building and pavement wash water where detergent and soaps are not used and where spills of toxic or hazardous materilas have not occured and the purpose is to remove mud, dirt or dust.

15. Construction waste disposal containers shall be provided on the site for disposal of all non-hazardous construction waste materials. The containers shall be hauled to landfill by the Contractor.

16. All hazardous materials shall be handled and disposed of by the Contractor in accordance with Federal, State and Local regulations.

CITY OF ALLEN DEPARTMENT OF ENGINEERING	STORM WATER POLLUTION PLAN NOTES	STANDARD CONSTRUCTION DETAILS EROSION CONTROL		
		DATE: JULY 2003	REV DATE: AUG. 2006	SHEET : SD-EC01

NOTES: SILT FENCE

1. Posts which support the silt fence shall be installed on a slight angle toward the anticipated runoff source. The post must be embedded a minimum of 18 inches.
2. The toe of the silt fence shall be trenched in with a spade or mechanical trencher, so that the downslope face of the trench is flat and perpendicular to the line of flow. Where fence cannot be trenched in (e.g. pavement), weight fabric flap with washed grave on the uphill side to prevent flow under fence.
3. The trench must be a minimum of 6 inches deep and 6 inches wide to allow for the silt fence fabric to be laid in the ground and backfilled with compacted material.
4. Silt fence shall be securely fastened to each support post or to woven wire, which is in turn attached to the support post. There shall be a 6 inch double overlap, securely fastened where ends of fabric meet.
5. Inspection shall be made daily or after each rainfall. Repair or replacement shall be made promptly as needed.
6. Silt fence shall be removed when the site is completely stabilized so as not to block or impede storm flow or drainage.
7. Accumalated silt shall be removed when it reached a depth of 3 inches. The silt shall be disposed of at an approved site and in such a manner as to not contribute to aditional siltation.

NOTE :
NOT TO BE USED ON PUBLIC ROADWAY

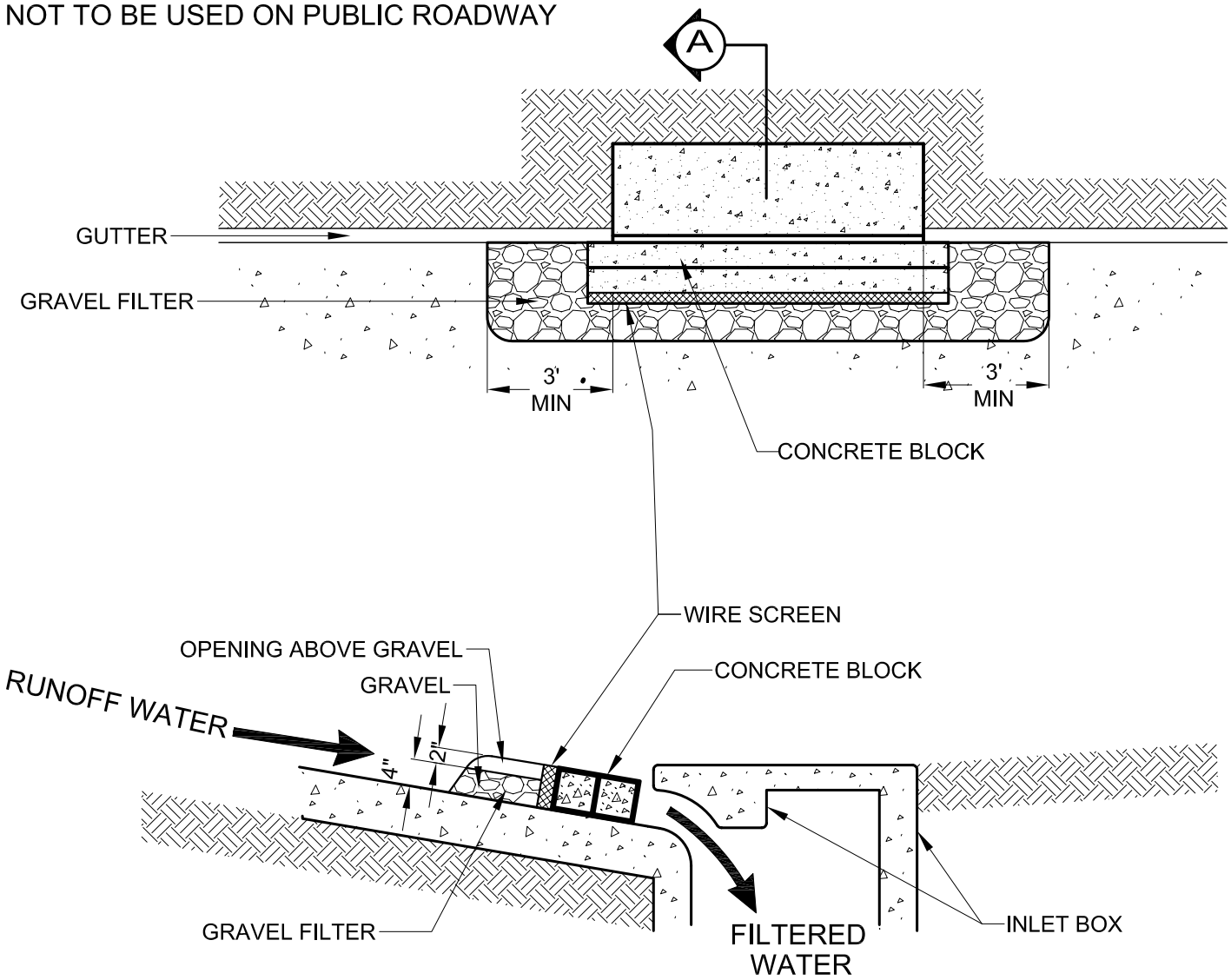

SECTION A

SCALE N.T.S.

SEDIMENT BARRIER AT INLETS

*P2 INLET FILTERS REQUIRED WHEN STREET IS OPEN TO VEHICULAR TRAFFIC.
SEDIMENT BARRIERS NOT ALLOWED ON OPEN THOROUGHFARES.

CITY OF ALLEN DEPARTMENT OF ENGINEERING	SEDIMENT BARRIER AT INLETS (AFTER PAVEMENT CONSTRUCTION)	STANDARD CONSTRUCTION DETAILS EROSION CONTROL		
		DATE: MAY 2005	REV DATE: AUG. 2006	SHEET : SD-EC03

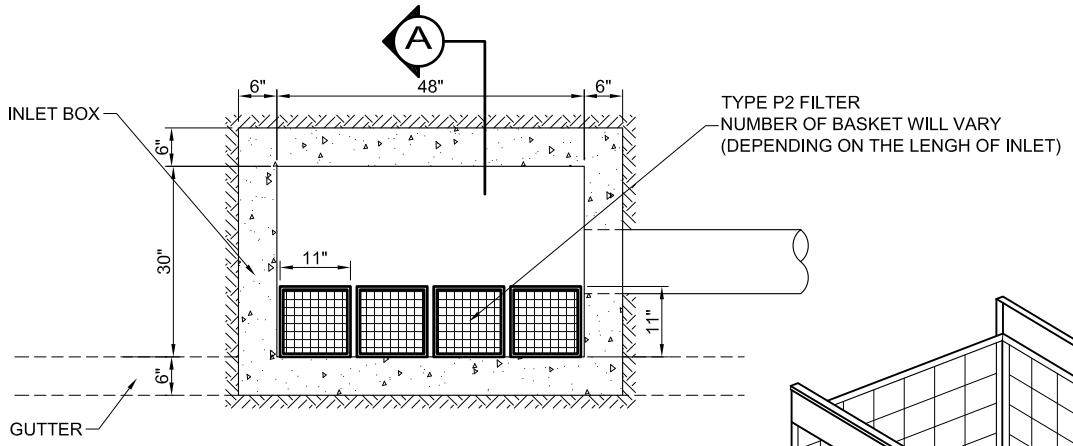

PLAN

SCALE N.T.S.

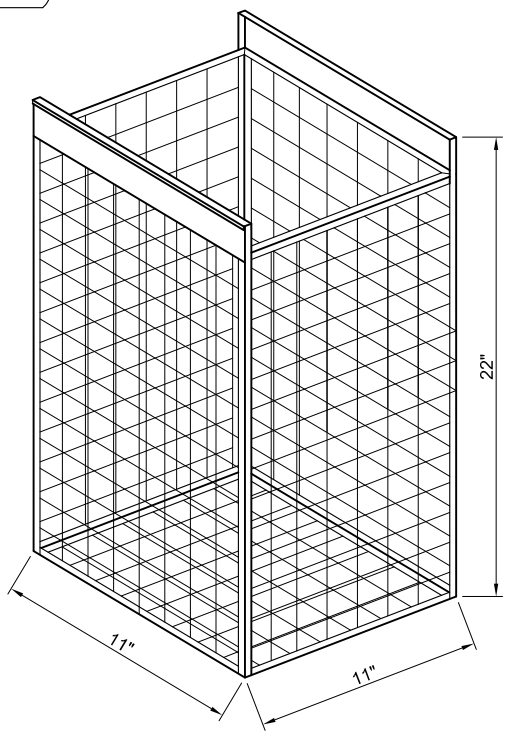

ENLARGED DETAIL

SCALE N.T.S.

SPECIFICATION :
INSERT CHAMBER
WIDTH 11"
LENGTH 11"
HEIGHT 22"
FILRATION SURFACE AREA 6.3sf.

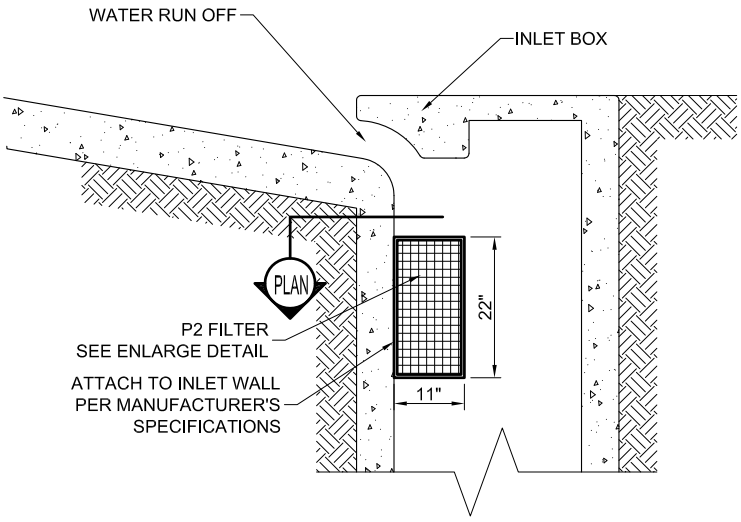

SECTION A

SCALE N.T.S.

P-2 INLET FILTERS AFTER PAVEMENT CONSTRUCTION

*P2 INLET FILTERS REQUIRED WHEN STREET IS OPEN TO VEHICULAR TRAFFIC.
FOR PRODUCT DETAIL CALL SNEIDER at 214-707-6956.

NOTE :

1. BASKETS SHALL BE LINED WITH FILTER FABRIC AND CLEANED/MAINTAINED BY CONTRACTOR ON A REGULAR BASIS.
2. P2 FILTERS ARE TO BE REMOVED BY CONTRACTOR WITH ALL EROSION CONTROL (BMPs) AT COMPLETION OF PROJECT.

CITY OF ALLEN DEPARTMENT OF ENGINEERING	TYPE P-2 INLET FILTERS AFTER PAVEMENT CONSTRUCTION	STANDARD CONSTRUCTION DETAILS EROSION CONTROL		
		DATE: MAY 2005	REV DATE: MAY 2013	SHEET : SD-EC04

4' (1.2 m) MIN. STEEL OR WOOD POSTS SPACED AT 5' (1.8 m) TO 8' (2.4 m) SOFTWOOD POSTS SHALL BE 3" (7.6 cm) MIN. IN. DIA. OR NOMINAL 2"x4" (5.1 cm x 10.2 cm). HARDWOOD POSTS SHALL HAVE A MIN. CROSS SECTION OF 1.5"x1.5" (3.8 cm x 3.8 cm).

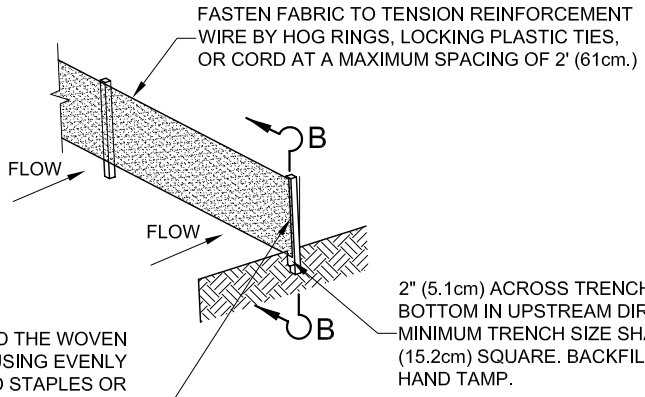

SILT FENCE

(SEE NOTES CITY OF ALLEN SPECIFICATIONS SD-EC02)

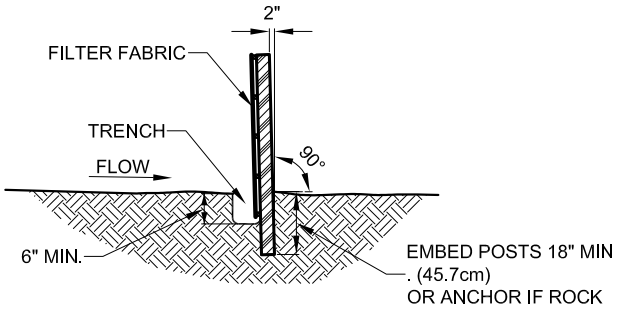

SECTION B

SCALE N.T.S.

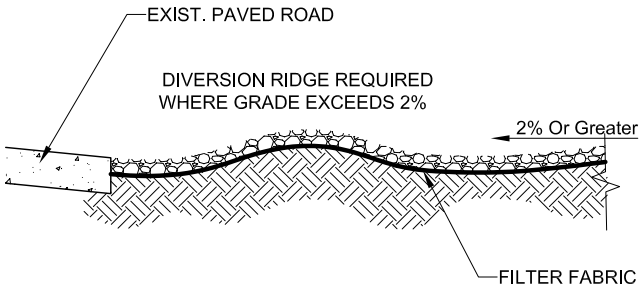

SECTION A

SCALE N.T.S.

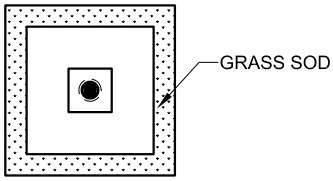

DROP INLET PROTECTION (TYP)

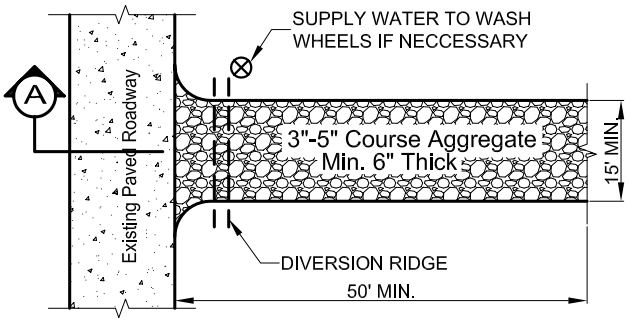

PLAN

SCALE N.T.S.

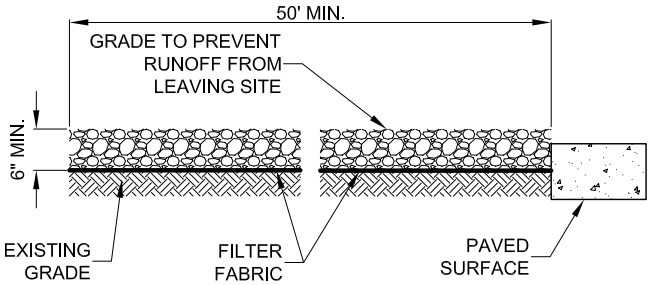

TEMPORARY STONE CONSTRUCTION ENTRANCE / EXIT

* STORM WATER PLAN APPLICABLE FOR ALL CIVIL ENGINEERING CONSTRUCTION

CITY OF ALLEN DEPARTMENT OF ENGINEERING	STORM WATER POLLUTION PLAN DETAILS	STANDARD CONSTRUCTION DETAILS EROSION CONTROL		
		DATE: MAY 2005	REV DATE: AUG. 2006	SHEET : SD-EC05

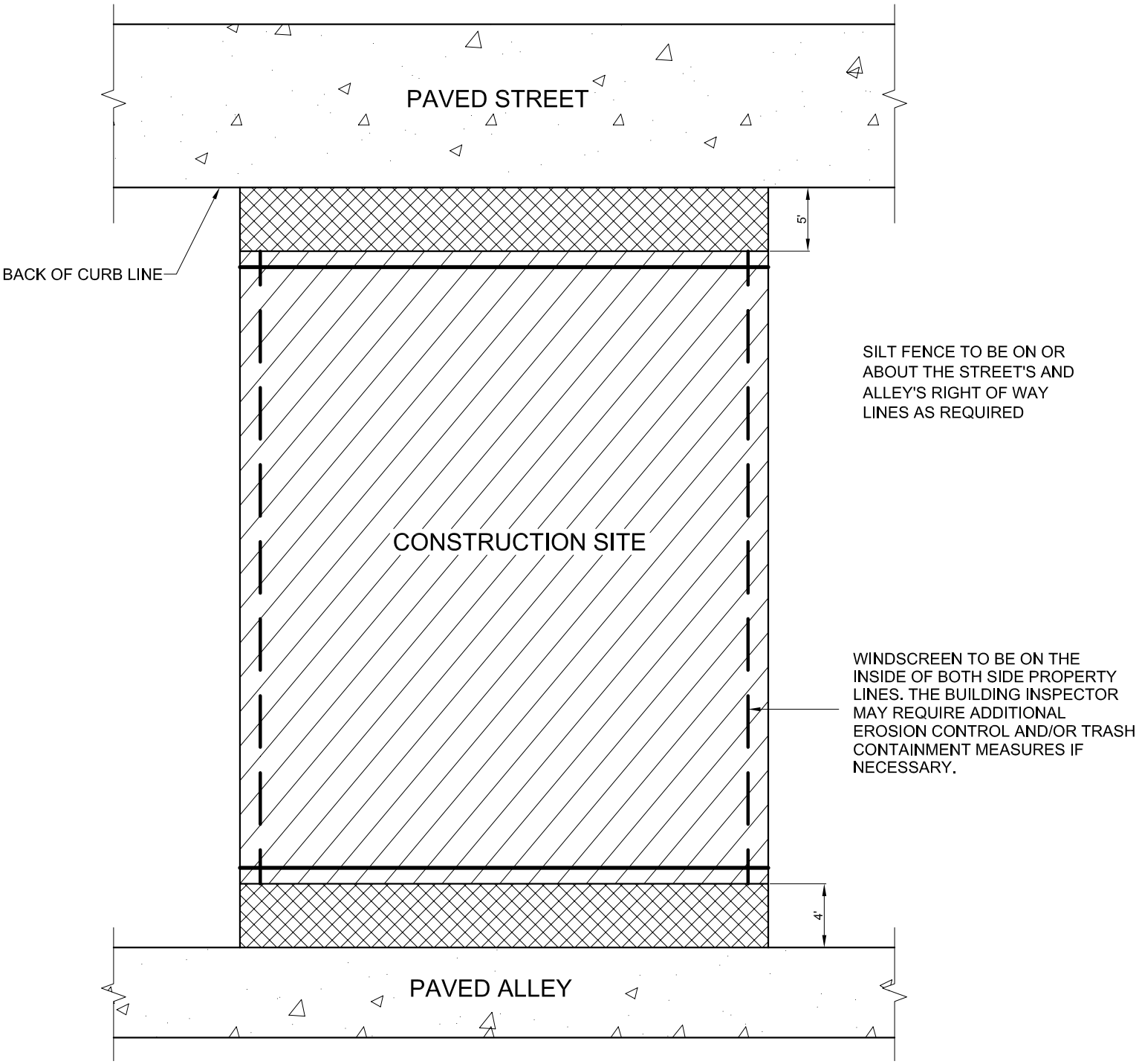

CURLEX OR EQUAL GROUND COVER

4' HIGH WINDSCREEN FENCE

2' HIGH SILT FENCE (WHERE REQUIRED BY SLOPE CONDITIONS)

CITY OF ALLEN DEPARTMENT OF ENGINEERING	DEBRIS CONTAINMENT FOR RESIDENTIAL & COMMERCIAL LOTS	STANDARD CONSTRUCTION DETAILS EROSION CONTROL		
		DATE: APRIL 2003	REV DATE: AUG. 2006	SHEET : SD-EC06

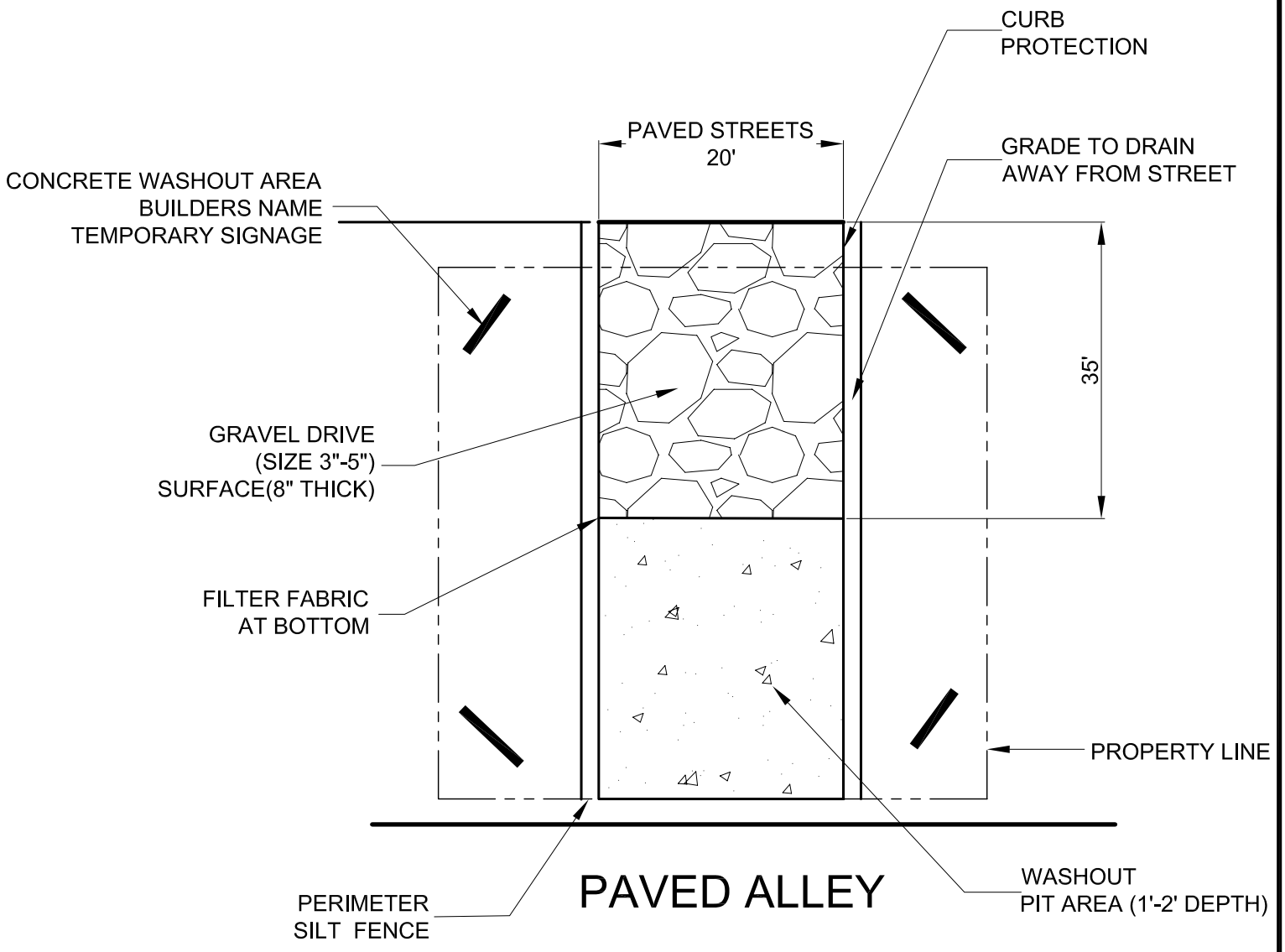

1. Necessary compliance with EPA requirements will require each builder to direct transit ready-mix concrete trucks to a designated wash out area.

2. This area will be centrally located building lot that is owned, maintained, and returned back to building pad state after subdivision is built out.

3. Waste from the site will require legal disposal.

4. It is the building contractors responsibility to direct the concrete drivers to the designated wash out area for the referenced subdivision.

CITY OF ALLEN DEPARTMENT OF ENGINEERING	DESIGNATED WASHOUT PIT FOR RESIDENTIAL LOTS	STANDARD CONSTRUCTION DETAILS EROSION CONTROL		
		DATE: AUG. 2003	REV DATE: AUG. 2006	SHEET : SD-EC07

STANDARD CONSTRUCTION DETAILS

RESIDENTIAL LOT DRAINAGE REQUIREMENT

REVISED - AUG. 2006

CITY OF ALLEN

DEPARTMENT OF ENGINEERING

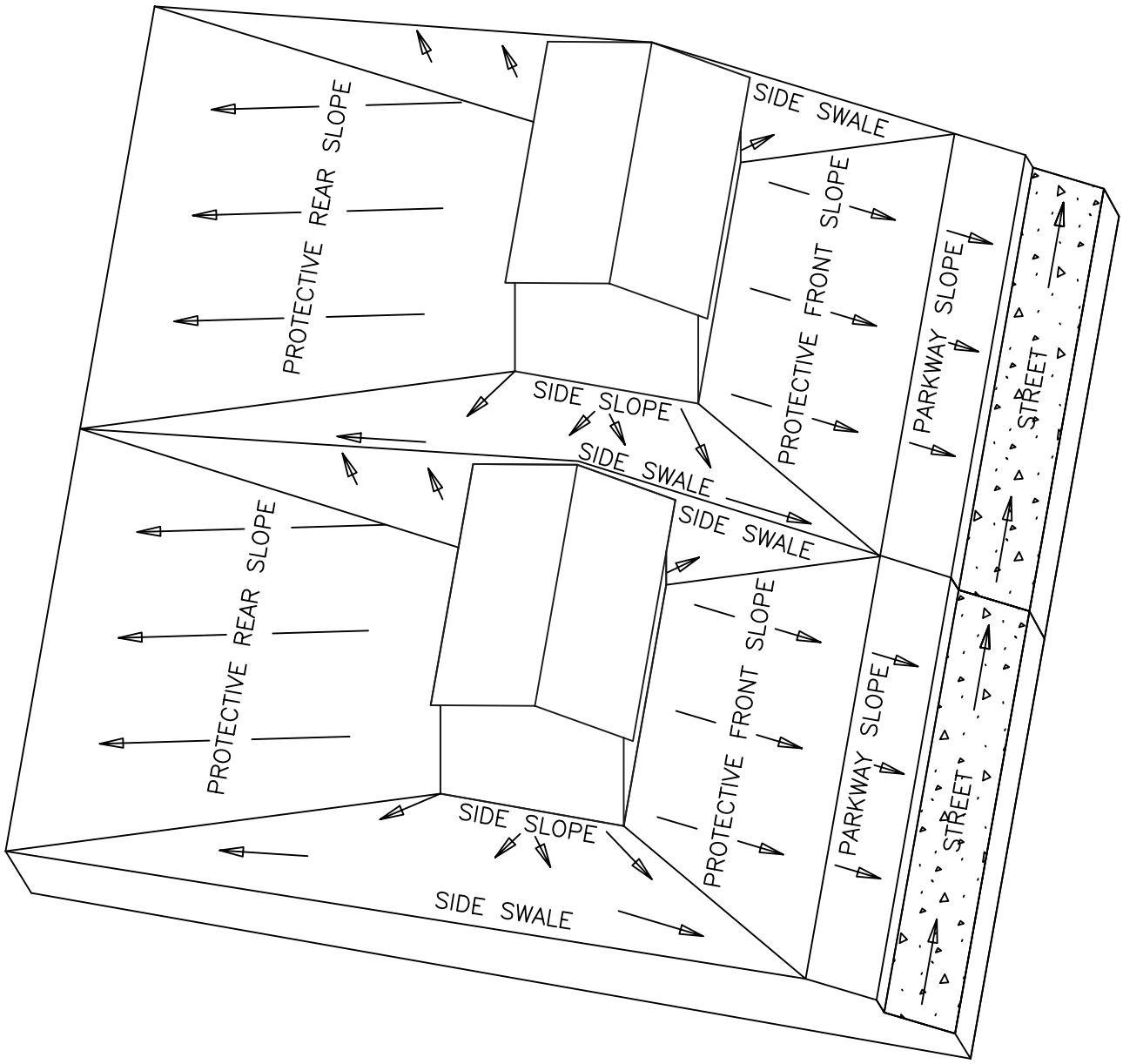

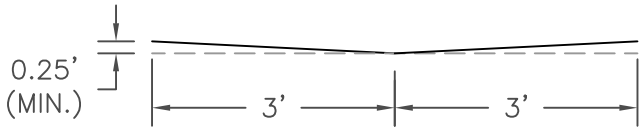

CROSS SECTION

* ALL HOUSE DRAINAGE EASEMENTS ARE TO BE PRIVATELY MAINTAINED.

OPTION FOR LOT TO LOT DRAINAGE IF APPROVED BY ENGINEER.

MINIMUM OF 1% SLOPE ALONG THE LENGTH OF THE SIDE YARD OR BACK YARD.

CITY OF ALLEN DEPARTMENT OF ENGINEERING	LOT GRADING TYPE "A"	STANDARD CONSTRUCTION DETAILS RESIDENTIAL LOT DRAINAGE REQUIREMENT		
		DATE: MAY 2005	REV DATE: AUG. 2006	SHEET: SD–RL01

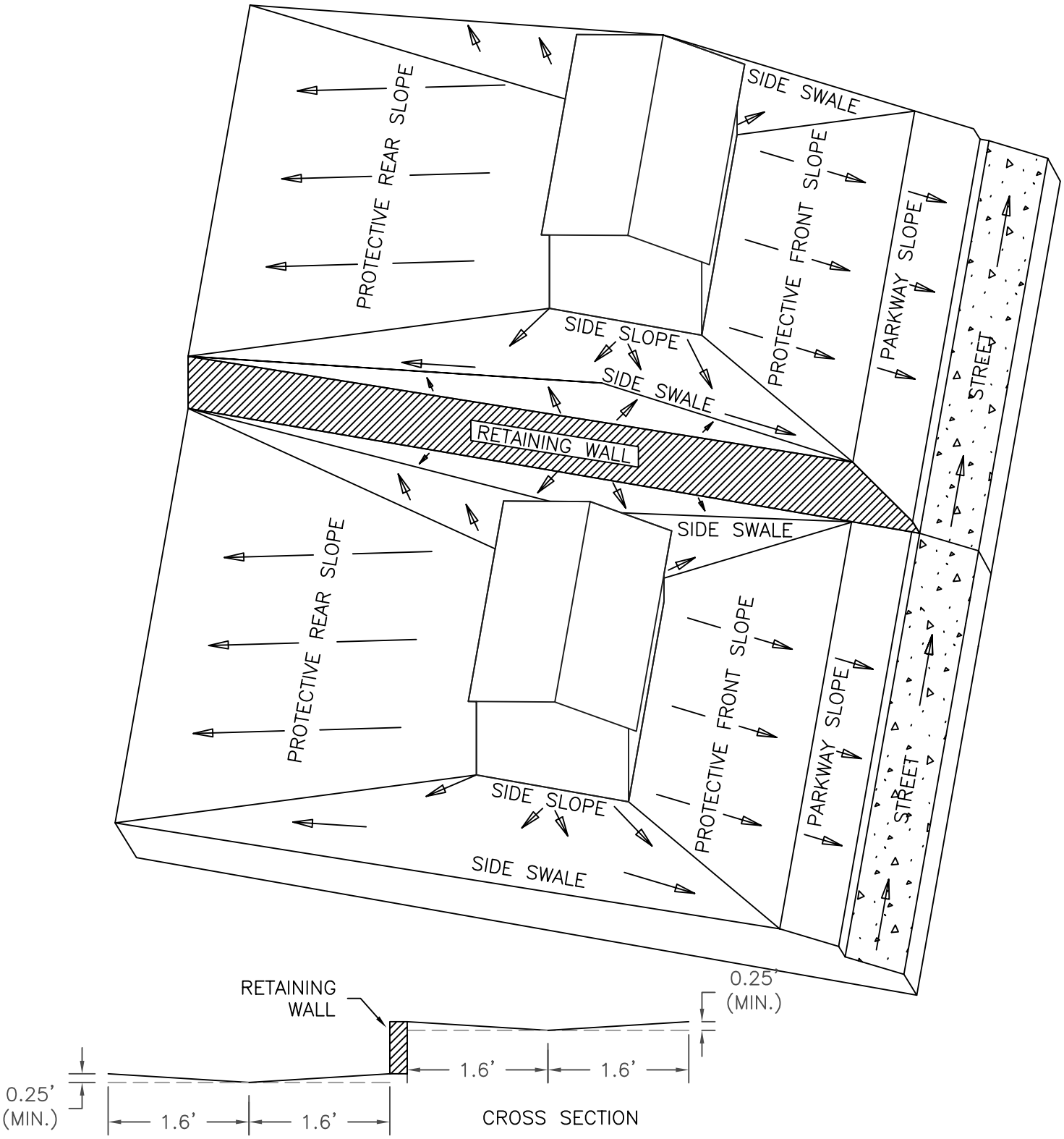

* ALL HOUSE DRAINAGE EASEMENTS ARE TO BE PRIVATELY MAINTAINED.

OPTION FOR LOT TO LOT DRAINAGE IF APPROVED BY ENGINEER.

MINIMUM OF 1% SLOPE ALONG THE LENGTH OF THE SIDE YARD OR BACK YARD.

CITY OF ALLEN DEPARTMENT OF ENGINEERING	LOT GRADING TYPE "B"	STANDARD CONSTRUCTION DETAILS RESIDENTIAL LOT DRAINAGE REQUIREMENT		
		DATE: MAY 2005	REV DATE: AUG. 2006	SHEET: SD-RL02

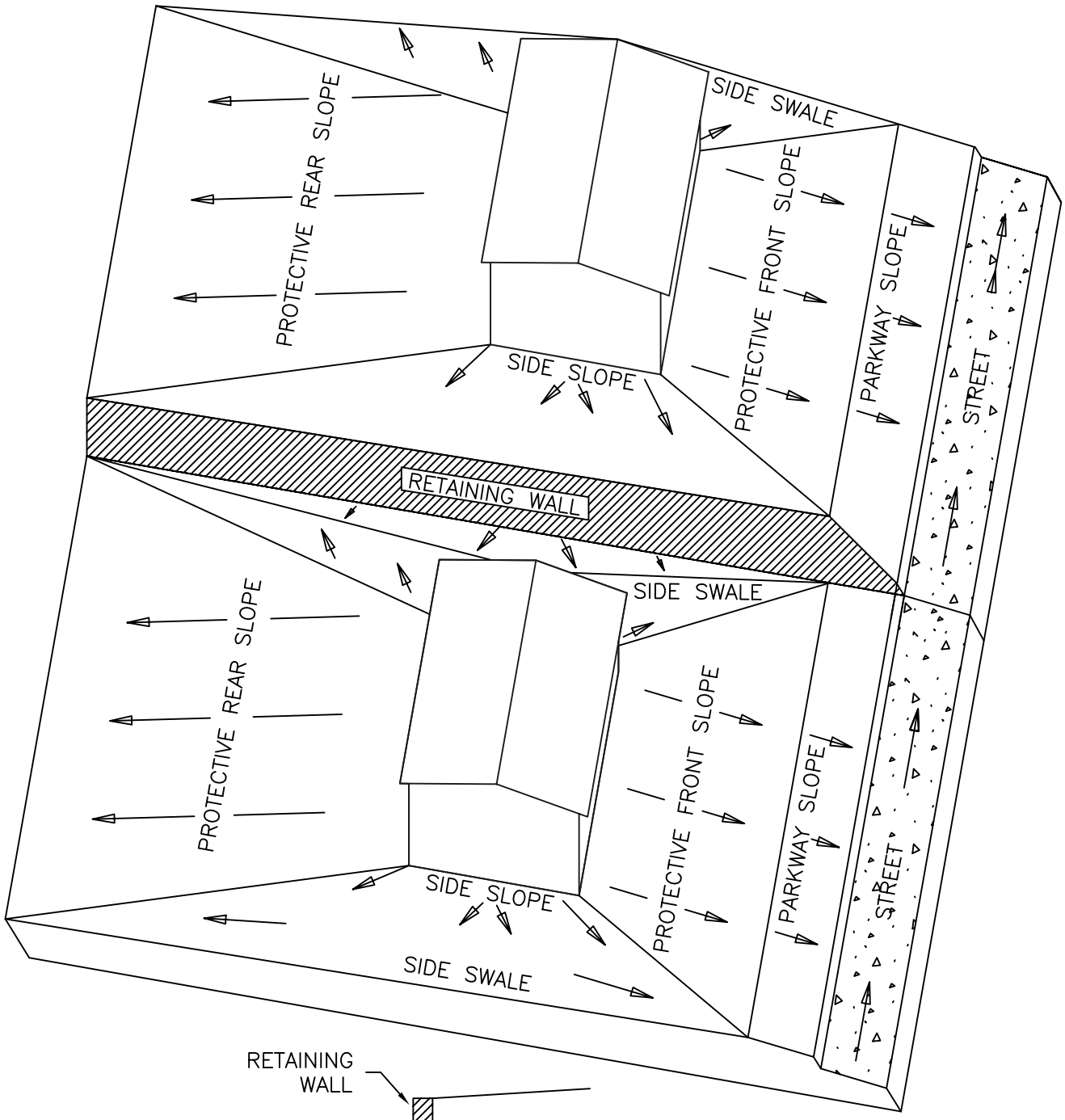

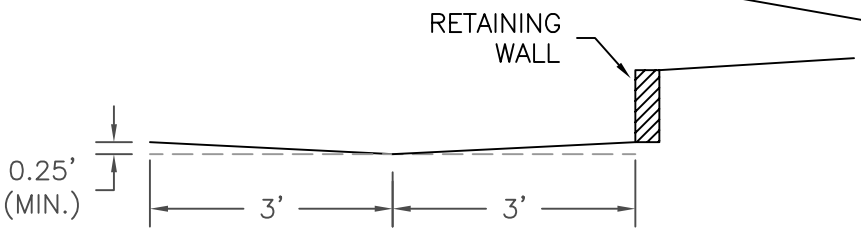

CROSS SECTION

* ALL HOUSE DRAINAGE EASEMENTS ARE TO BE PRIVATELY MAINTAINED.

OPTION FOR LOT TO LOT DRAINAGE IF APPROVED BY ENGINEER.

MINIMUM OF 1% SLOPE ALONG THE LENGTH OF THE SIDE YARD OR BACK YARD.

CITY OF ALLEN DEPARTMENT OF ENGINEERING	LOT GRADING TYPE "C"	STANDARD CONSTRUCTION DETAILS RESIDENTIAL LOT REQUIREMENT		
		DATE: MAY 2005	REV DATE: AUG. 2006	SHEET: SD–RL03

ALL HOUSE DRAINAGE EASEMENTS ARE TO BE PRIVATELY MAINTAINED.

OPTION FOR LOT TO LOT DRAINAGE IF APPROVED BY ENGINEER.

MINIMUM OF 1% SLOPE ALONG THE LENGTH OF THE SIDE YARD OR BACK YARD.

CITY OF ALLEN DEPARTMENT OF ENGINEERING	LOT GRADING TYPE "D"	STANDARD CONSTRUCTION DETAILS RESIDENTIAL LOT GRADING REQUIREMENT		
		DATE: MAY 2005	REV DATE: AUG. 2006	SHEET : SD-RL04

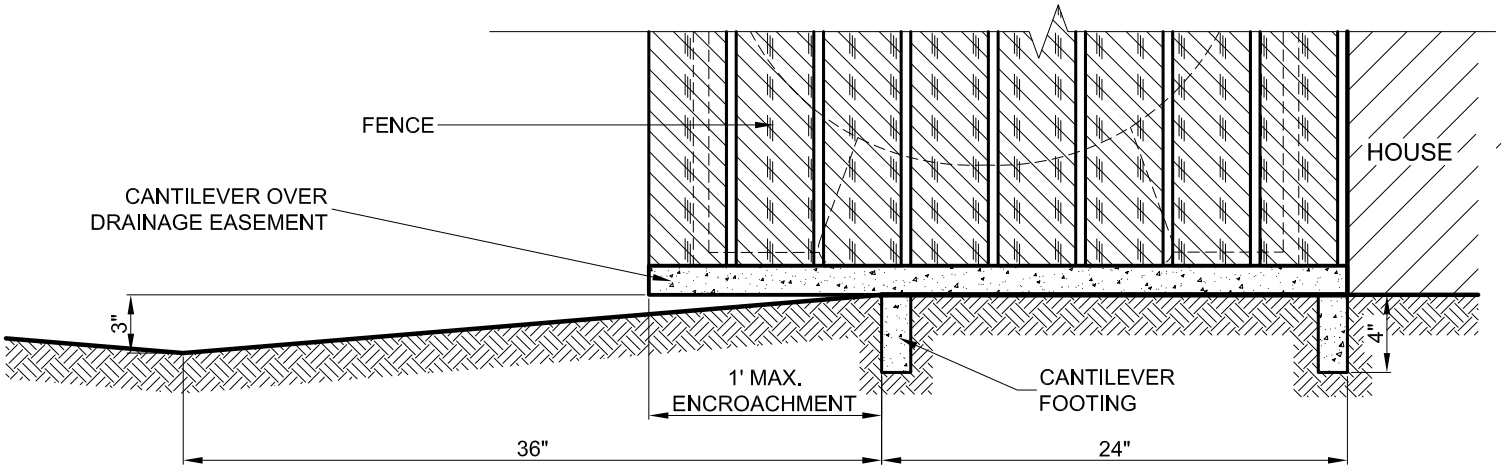

ENLARGE DETAIL

SCALE N.T.S.

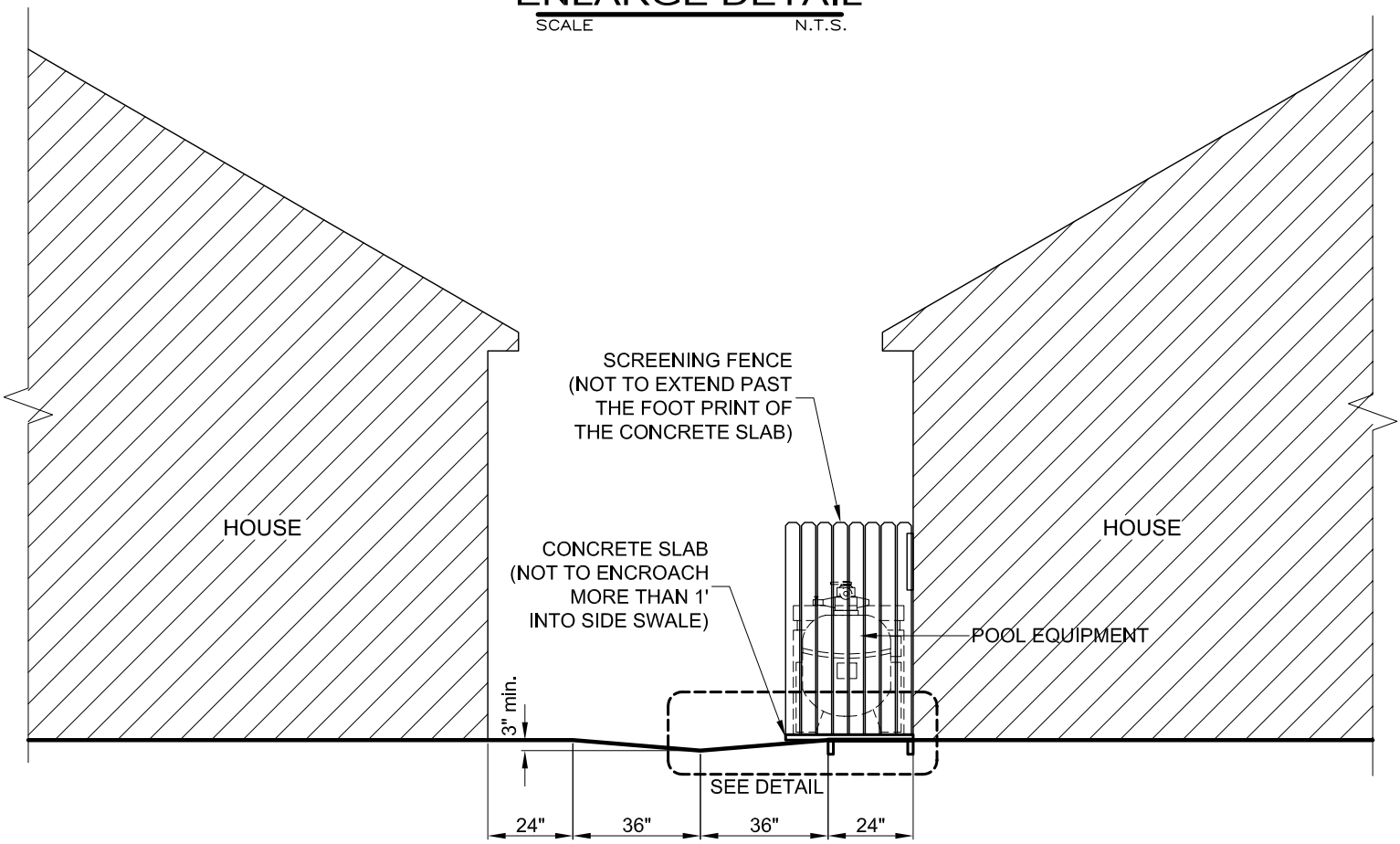

CITY OF ALLEN
DEPARTMENT OF ENGINEERING

SIDE SWALE ENCROACHMENT

STANDARD CONSTRUCTION DETAILS
EROSION CONTROL

DATE:	REV DATE:	SHEET:
MAY 2005	AUG.2006	SD-RL05