STANDARD CONSTRUCTION DETAILS

PAVING

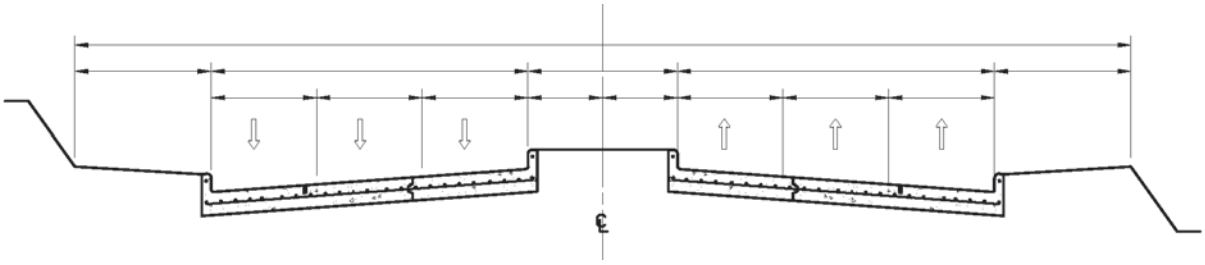

REVISED - FEBRUARY 2017

CITY OF ALLEN
ENGINEERING DEPARTMENT

TABLE OF CONTENTS

PAVING

GENERAL NOTES SD-PO1
REINFORCED CONCRETE PAVEMENT SD-P02
PARABOLIC PAVEMENT CROWN SD-P03
M4D PAVEMENT SD-P04
M4D, M6D PAVEMENT SD-P05
CURB AND GUTTER SD-P06
ASPHALT PAVING CROSS SECTION SD-P07
ALLEY SECTIONS SD-P08
GENERAL NOTES FOR ALLEYS AND DRIVEWAYS SD-P09
ALLEY TURN 75° OR GREATER SD-P10
ALLEY TURN 30° - 75° SD-P11
ALLEY INTERSECTING ALLEY SD-P12
ALLEY TURN 60°- 120° SD-P13
ALLEY RETURN DETAILS SD-P14
EXISTING ALLEY RETURN MODIFICATIONS (CONCRETE) SD-P15
EXISTING ALLEY RETURN MODIFICATIONS (ASPHALT) SD-P16
ALLEY ENTRANCE ONTO EXISTING STREET SD-P17
MEDIAN DETAILS SD-P18
MEDIAN PAVING STONE DETAIL SD-P19
MEDIAN MAINTENANCE ACCESS (MEDIAN CURB LAY-DOWN) SD-P20
STREET HEADER SD-P21
PAVEMENT REPAIR HEADER SD-P22
RAIL HEADER SD-P23
JOINT DETAILS SD-P24
CONCRETE BUTT JOINT SD-P25
TRANSVERSE EXPANSION JOINT SD-P26
SPACING DIAGRAM FOR TRANSVERSE JOINTS SD-P27
INTERSECTION CONDUIT LAYOUT SD-P28
TYPICAL CONTOURS FOR MAJOR-MAJOR INTERSECTION SD-P29
CONCRETE SIDEWALK SD-P30
CONCRETE SIDEWALK (CONTINUED) SD-P31
SIDEWALK BRICK PAVERS SD-P32
CURB AND LEAD WALK REPAIR SD-P33
BARRIER FREE RAMPS TYPE "A" & "B" SD-P34
BARRIER FREE RAMPS TYPE "C" & "D" SD-P35
BARRIER FREE RAMPS TYPE "E" SD-P36
BARRIER FREE RAMPS TYPE "F" SD-P37
BARRIER FREE RAMPS TYPE "G" SD-P38
BARRIER FREE RAMPS TYPE "H" SD-P39
BARRIER FREE GENERAL NOTE & DETECTABLE SURFACE SD-P40
BARRIER FREE RAMPS, DRIVEWAYS & ALLEYS SD-P41
DRIVEWAY RETURN DETAILS, STREET (RESIDENTIAL & COMMERCIAL) SD-P42
SIDEWALKS AND DRIVEWAYS SD-P43
DRIVEWAY RETURN FOR ALLEY SD-P44
STREET CONNECTION SD-P45
SIDEWALK FLUME DETAIL SD-P46
ALTERNATE STREET R.O.W. SECTION FOR MOUNTABLE CURB SD-P47
MAILBOX DETAIL SD-P48

GENERAL NOTES

A. GENERAL:
PAVEMENT THICKNESS IS AS SHOWN IN ITEM G. SUBGRADE DESIGN SHALL CONFORM TO CITY OF ALLEN DEPARTMENT OF ENGINEERING REQUIREMENTS IN ITEM C, AND SHALL EXTEND 12" MIN. BEHIND THE BACK OF CURB

B. REINFORCED CONCRETE PAVEMENT:
1. CONCRETE STRENGTH SHALL BE AS SHOWN IN ITEM G (NCTCOG LATEST EDITION).
2. ALL CURBS SHALL BE INTEGRAL WITH PAVEMENT AND SHALL BE OF THE SAME STRENGTH AS CONCRETE PAVEMENT.
3. DETAIL AND ARRANGEMENT OF PAVEMENT JOINTS, ALL TYPES, SHALL BE AS SHOWN ON SHEET SD-P04 AND SP-P05.
4. BAR LAPS SHALL BE THIRTY DIAMETERS.
5. REINFORCING STEEL SHALL BE #3 REBAR (3/8") ON 18" CENTERS.

C. SUBGRADE:
SUBGRADE UNDER ALL PAVEMENT SHALL BE 6" THICK AND SHALL BE STABILIZED WITH AT LEAST 30 LBS. PER SQ. YD. HYDRATED LIME, COMPACTED TO A DENSITY NOT LESS THAN 95 PERCENT. LABORATORY TESTS MUST BE SUBMITTED TO THE ENGINEERING DEPARTMENT FOR APPROVAL TO DETERMINE AMOUNT OF LIME REQUIRED. LABORATORY TEST MAY BE WAIVED PROVIDED AT LEAST 36 LBS. OF LIME PER SQ. YD. IS USED. SEE ITEM 4.6.4 SPECIAL PROVISIONS.

D. BAR CHAIRS OR AN APPROVED DEVICE SHALL BE FURNISHED.

E. NO TRAFFIC ON FINISHED SUBGRADE SHALL BE PERMITTED AFTER REINFORCING STEEL IS INSTALLED ABOVE SUBGRAGE. NO TRAFFIC SHALL BE PERMITTED BEFORE OR DURING THE PLACING OF CONCRETE.

F. CROSS SLOPE OF STRAIGHT CROWN STREETS SHALL BE 1/4" PER FOOT UNLESS APPROVED BY CITY ENGINEER. (SEE SD-PO3). ALL SIDEWALK CROSS SLOPES SHALL BE MIN. 1/8" PER FOOT, AND IN NO CASE SHALL EXCEED 1/4" PER FOOT (ZERO TOLERANCE), TO MEET ACCESSIBILITY REQUIREMENTS.

G. PAVEMENT THICKNESS AND STRENGTHS SHALL BE AS FOLLOWS:
M8D-8"- CLASS "C"
M6D-8"- CLASS "C"
M4D-8"- CLASS "C"
C4D-7"- CLASS "C" #4 BAR @ 12" O.C. EW
C2U-7"- CLASS "C" # 4 BAR @ 12" O.C. EW
R2U-6"- CLASS "C" #3 BAR @ 12" O.C. EW
FIRE LANES-6"- CLASS "C"
SIDEWALK AND BFRs-4"-CLASS "A"
DRIVE APPROACH-6"-CLASS "C"
ALLEY-8"-4"-8"-CLASS "C"

H. CLASS "C" CONCRETE SHALL BE 3600 PSI COMP AS DEFINED BY NCTCOG.

I. ALL MEDIANS AND PARKWAYS SHALL BE PROVIDED WITH BERMUDA GROUND COVER.

J. ONCE A CURB ABUTTING A THOROUGHFARE HAS BEEN SAWCUT AND REMOVED, THE CONTRACTOR MUST REPLACE THE CONCRETE WITH A NEW POUR (i.e. DRIVEWAY) WITHIN 14 CALENDAR DAYS. LIQUIDATED DAMAGES WILL BE ASSESSED AT $500 PER DAY FOR EACH CALENDAR DAY IN EXCESS OF 14 CALENDAR DAYS. PAYMENT SHALL BE MADE PRIOR TO ACCEPTANCE OR ISSUANCE OF A CERTIFICATE OF OCCUPANCY.

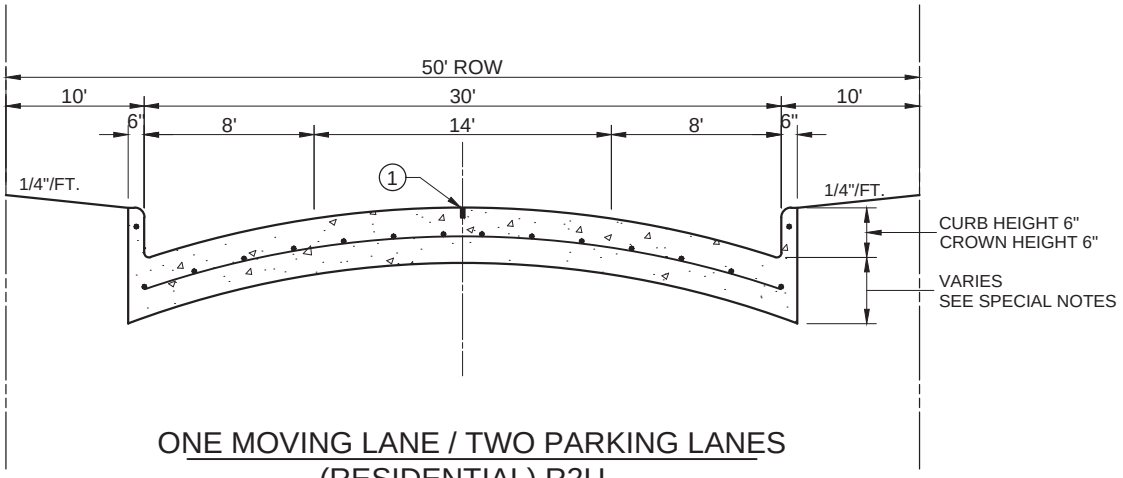

ONE MOVING LANE / TWO PARKING LANES
(RESIDENTIAL) R2U

NTS

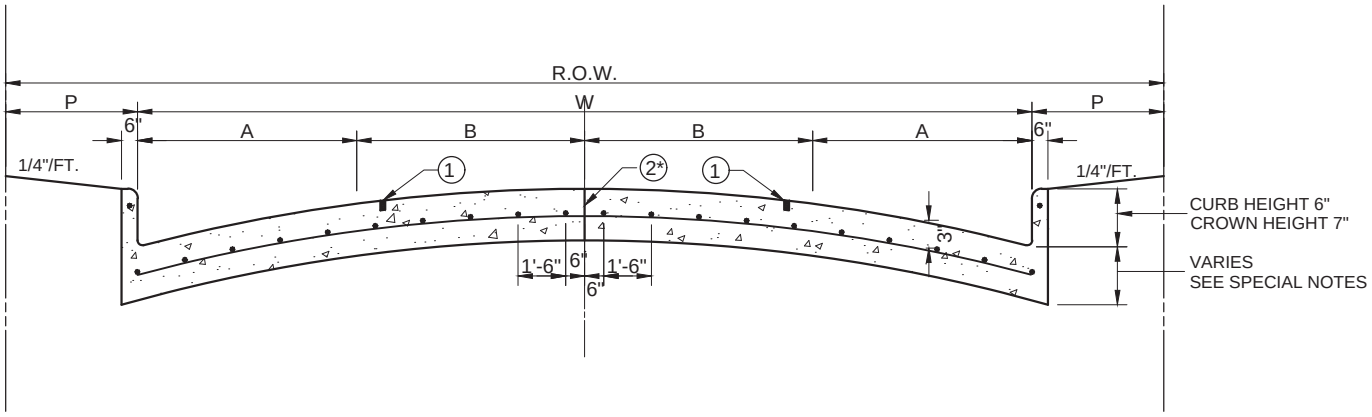

* FULL WIDTH PAVEMENT OF 36' WIDTH STREETS IS ALLOWED WHERE APPROVED BY THE CITY OF ALLEN.

STREET TYPE	STREET WIDTH (W)	A	B	R.O.W. WIDTH	P
C2U	36' *	8'	10'	60'	12'
COLLECTOR	44'	10'	12'	70'	13'
COLLECTOR	48'	12'	12'	70'	11'

FOUR MOVING LANES OR
TWO MOVING LANES / TWO PARKING LANES

NTS

1. SAWED LONGITUDAL DUMMY JOINT.
2. CONSTRUCTION JOINT (FULL WIDTH PAVEMENT IS ALLOWED WHERE APPROVED BY ENGINEERING DEPARTMENT).
3. ALL REINFORCING BARS SHALL BE NO. 3 TRAVERSE BARS TO BE SPACED ON 1'-6" CENTERS, LONGITUDINAL BARS TO BE SPACED ON 1'-6" EXCEPT WHERE NOTED.
4. A NO. 3 BAR, CONTINUOUS, SHALL BE PROVIDED FOR CURB REINFORCEMENT.

CITY OF ALLEN
DEPARTMENT OF ENGINEERING

REINFORCED CONCRETE PAVEMENT

STANDARD CONSTRUCTION DETAILS
PAVING

DATE:	REV DATE:	SHEET :
MAY 1991	AUG. 2006	SD-P02

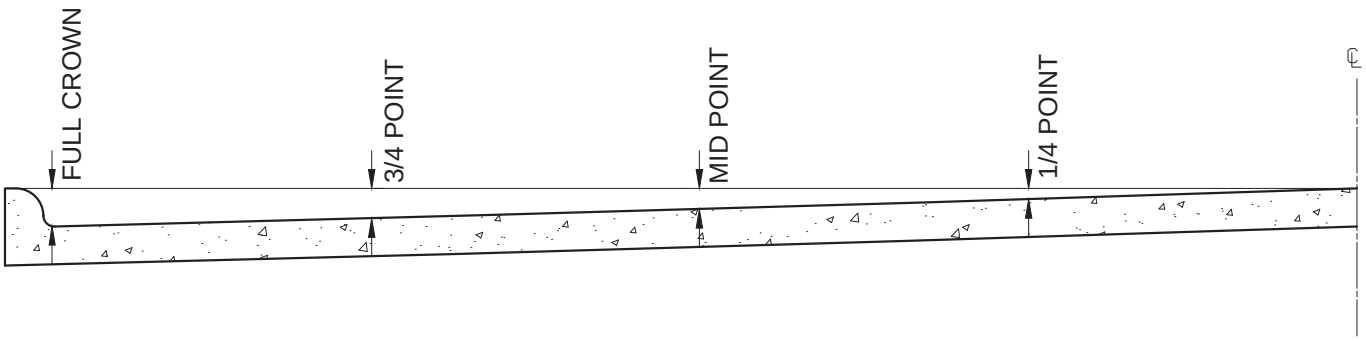

SLIP-FORM PAVEMENT MUST MEET CROWN GRADES AT GUTTERS,
AT MID-POINTS AND CENTERLINE. WIDTHS OF PAVEMENT ARE FACE TO FACE.

ROADWAY WIDTH (W)	TOTAL CROWN HEIGHT	3/4 POINT	MID-POINT	1/4 POINT
30'	6"	3 - 3/8"	1 - 1/2"	3/8"
36'	7"	3 - 7/8"	1 - 3/4"	3/8"
44'	7"	3 - 7/8"	1 - 3/4"	1/2"
48'	7"	3 - 7/8"	1 - 3/4"	1/2"
60'	7"	3 - 7/8"	1 - 3/4"	1/2"
2-34'	5"	3 - 3/8"	1 - 1/2"	3/8"

TABLE OF CROWN HEIGHTS AND ORDINATES
FOR VARIOUS PARABOLIC SECTIONS
NTS

CITY OF ALLEN
DEPARTMENT OF ENGINEERING

PARABOLIC PAVEMENT CROWN

STANDARD CONSTRUCTION DETAILS
PAVING

DATE:	REV DATE:	SHEET :
MAY 1991	AUG. 2006	SD-P03

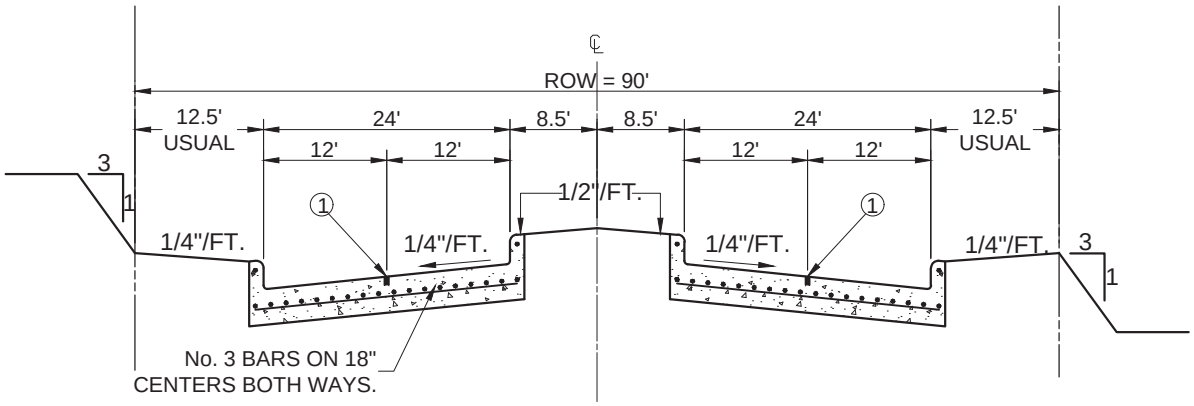

M4D PAVEMENT
REGULAR SECTION

NTS

1. SAWED LONGITUDINAL DUMMY JOINT
2. CONSTRUCTION JOINT (FULL WIDTH PAVEMENT IS ALLOWED WHERE APPROVED BY THE CITY OF ALLEN). DELETE IF PAVING IS 25 FT. WIDTH TO BE WIDENED LATER. INSTALL CURB IF PAVING IS LESS THAN FULL WIDTH OF 33'-36'.
3. A NUMBER 3 BAR CONTINUOUS SHALL BE PROVIDED FOR CURB REINFORCEMENT

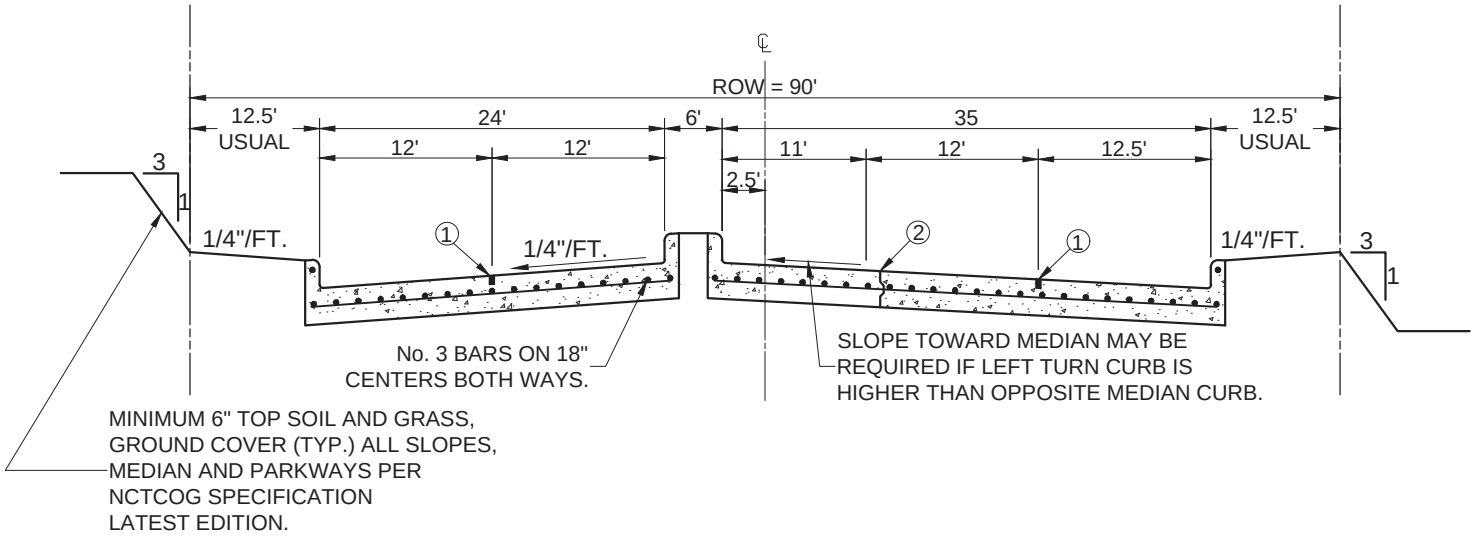

M4D PAVEMENT
LEFT TURN SECTION

NTS

CITY OF ALLEN DEPARTMENT OF ENGINEERING	MD4 PAVEMENT	STANDARD CONSTRUCTION DETAILS PAVING		
		DATE: MAY 1991	REV DATE: AUG. 2006	SHEET : SD-P04

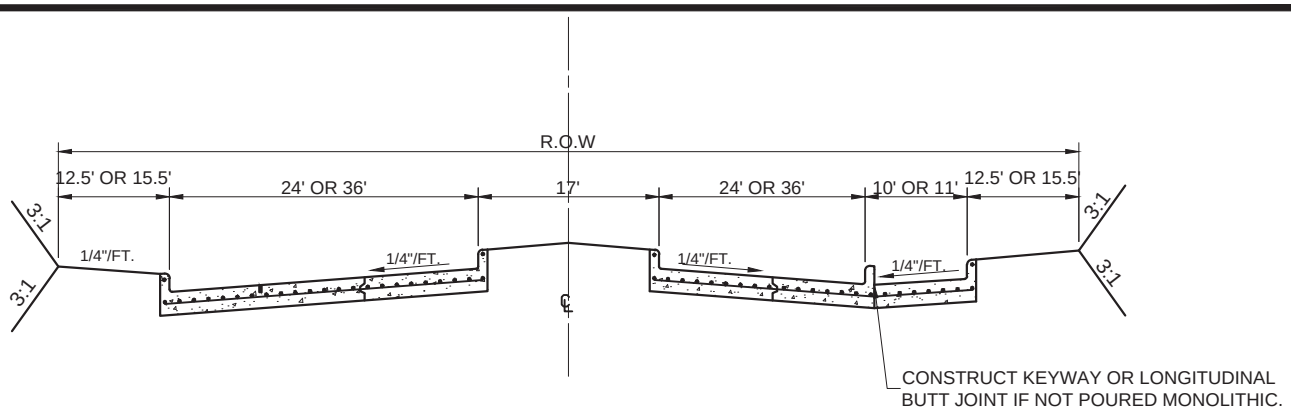

TYPE M4D,M6D PAVEMENT
RIGHT TURN OR DECELERATION LANE SECTION

NTS

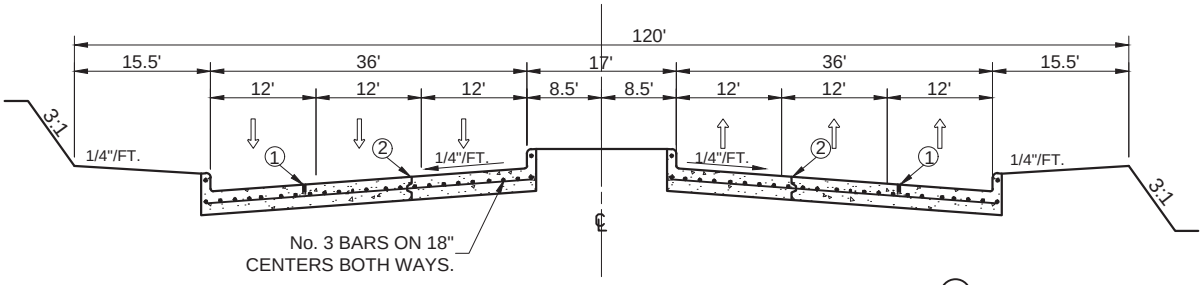

TYPE M6D PAVEMENT REGULAR SECTION

NTS

(1) SAWED LONGITUDINAL DUMMY JOINT.

(2) CONSTRUCTION JOINT (FULL WIDTH PAVEMENT IS ALLOWED WHERE APPROVED BY THE CITY OF ALLEN). DELETE IF PAVING IS 25 FT. WIDTH TO BE WIDENED LATER. INSTALL CURB IF PAVING IS LESS THAN FULL WIDTH OF 33'-36'.

(3) A NUMBER 3 BAR CONTINUOUS SHALL BE PROVIDED FOR CURB REINFORCEMENT.

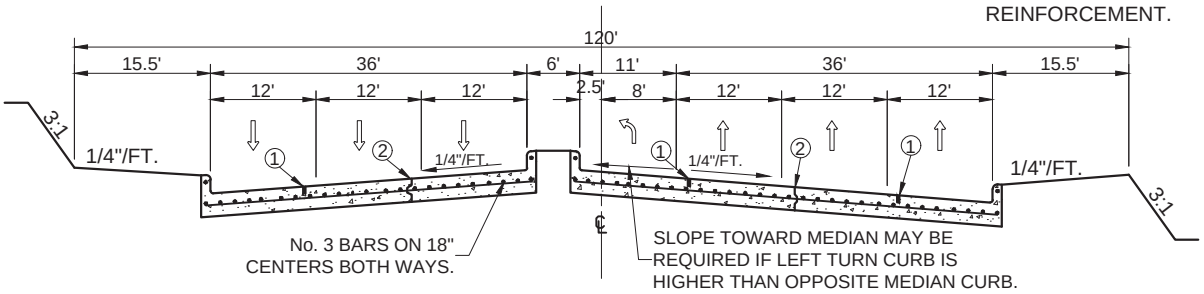

TYPE M6D PAVEMENT 120' R.O.W.

NTS

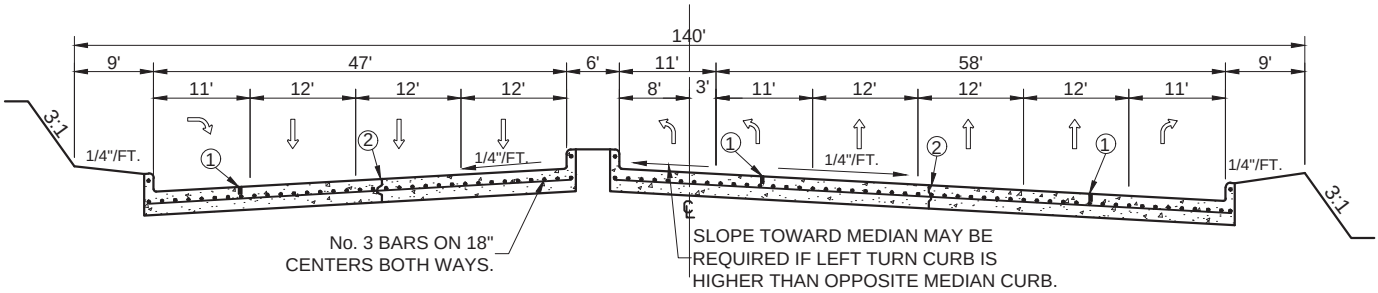

TYPE M6D PAVEMENT 140' R.O.W.

NTS

CITY OF ALLEN DEPARTMENT OF ENGINEERING	MD4, MD6 PAVEMENT	STANDARD CONSTRUCTION DETAILS PAVING		
		DATE: MAY 1991	REV DATE: AUG. 2006	SHEET : SD-P05

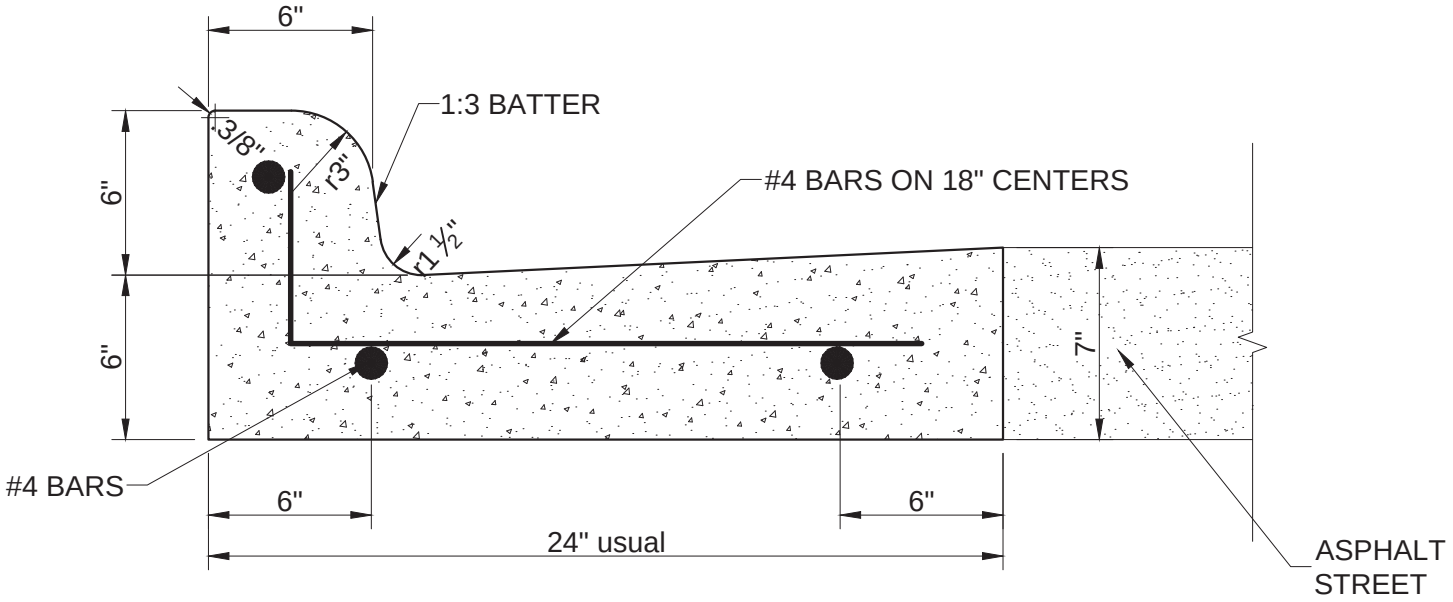

SEPARATE CURB-AND-GUTTER (ASPHALT)

SCALE N.T.S.

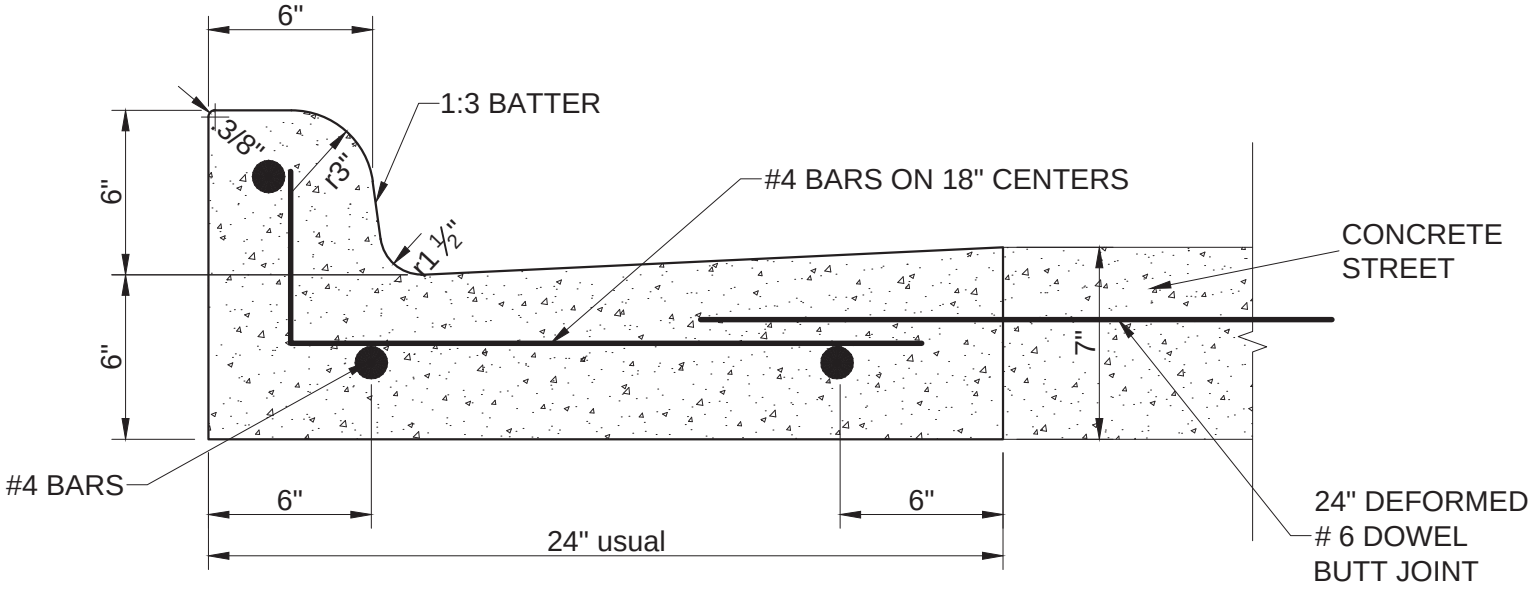

SEPARATE CURB-AND-GUTTER (CONCRETE)

SCALE N.T.S.

CITY OF ALLEN DEPARTMENT OF ENGINEERING	CURB-AND-GUTTER	STANDARD CONSTRUCTION DETAILS PAVING		
		DATE: MAY 1991	REV DATE: OCT. 2016	SHEET : SD-P06

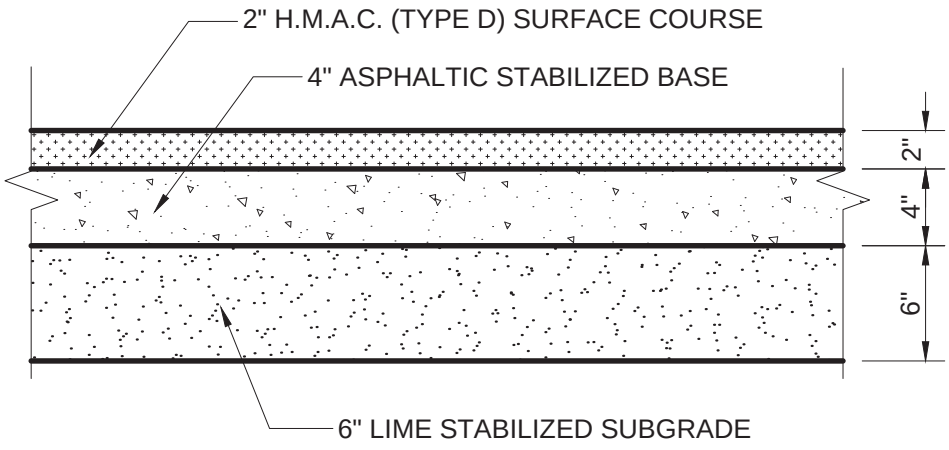

ASPHALT PAVING CROSS SECTION

NOTE :

CUT OF 6" INTO EXISTING PAVEMENT IS REQUIRED FOR CONSTRUCTION JOINT WITH NEW POURS TO GET A SMOOTH FINISH

CITY OF ALLEN DEPARTMENT OF ENGINEERING	ASPHALT PAVING CROSSECTION	STANDARD CONSTRUCTION DETAILS PAVING		
		DATE: MAY 1991	REV DATE: AUG. 2006	SHEET : SD-P07

ALLEY WIDTH (A)	HALF SECTION WIDTH (L)	INVERT DEPTH (d)
12'	6'	6"
16'	8'	6"
20'	10'	6"

GENERAL NOTE:
ALL ALLEYS TO BE LIMED IN ACCORDANCE WITH ITEM C, SD PO1

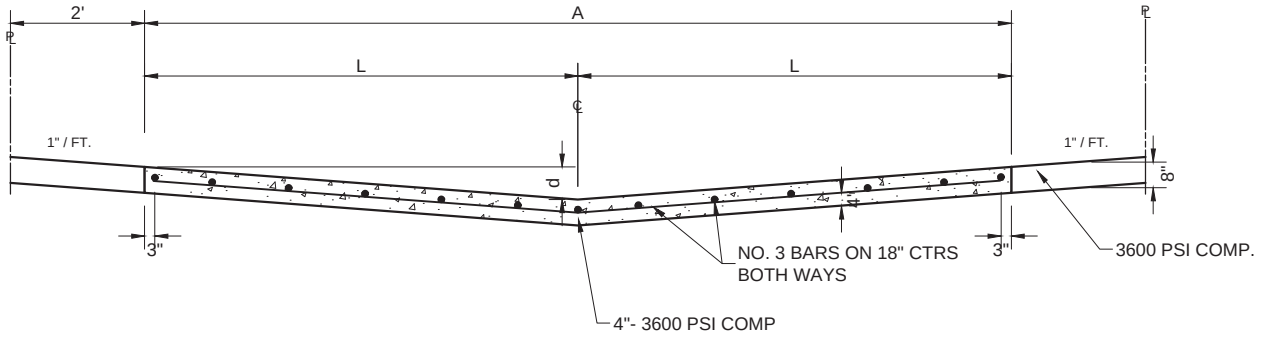

STANDARD 12', 16' & 20' ALLEY SECTION

NTS

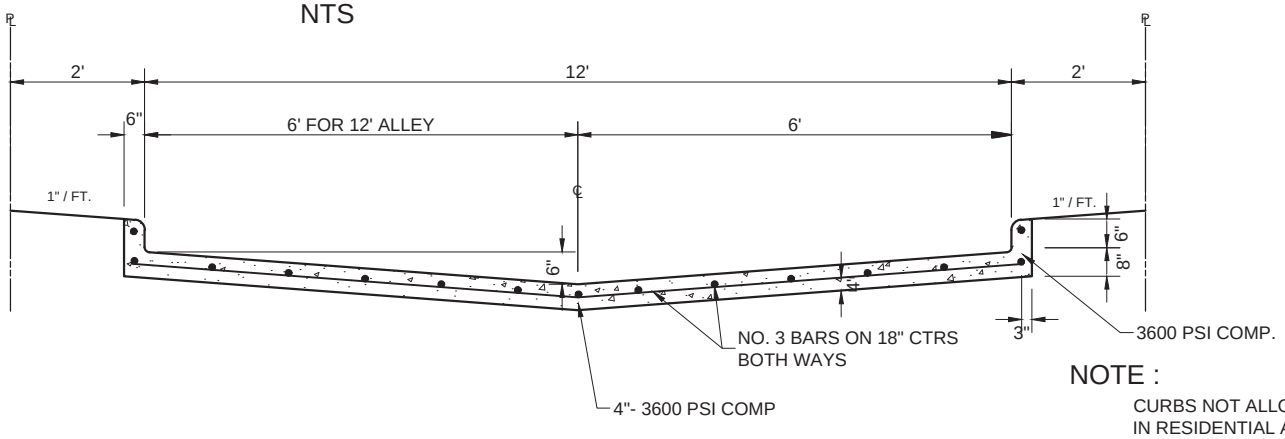

NOTE :

CURBS NOT ALLOWED IN RESIDENTIAL AREAS EXCEPT AS APPROVED BY THE CITY.

3 BAR CONTINUOUS IN CURB.

STANDARD ALLEY SECTION WITH CURB

NTS

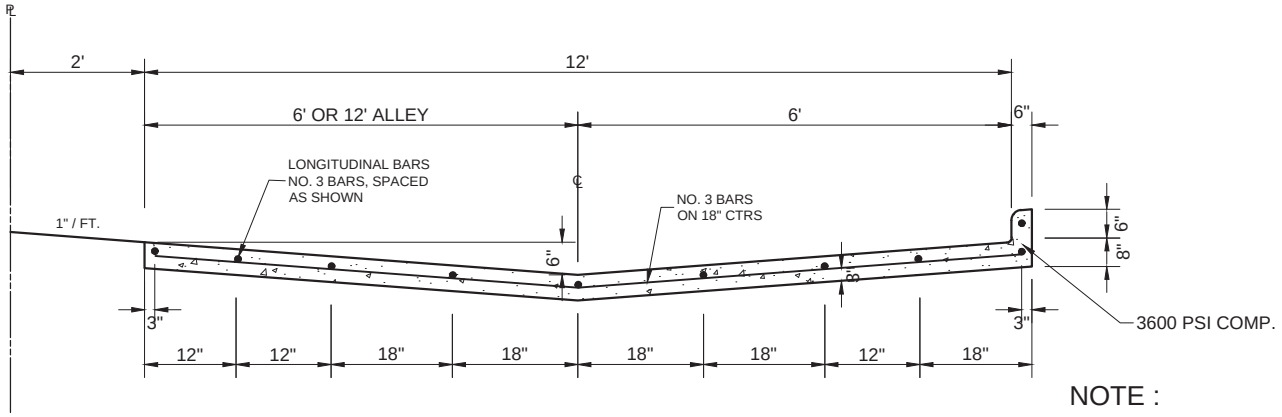

NOTE :

CURBS NOT ALLOWED IN RESIDENTIAL AREAS EXCEPT AS APPROVED BY THE CITY.

3 BAR CONTINUOUS IN CURB.

ALTERNATE 12' ALLEY SECTION / CURB

NTS

CITY OF ALLEN DEPARTMENT OF ENGINEERING	ALLEY SECTION	STANDARD CONSTRUCTION DETAILS PAVING		
		DATE: SEPT. 1991	REV DATE: AUG. 2006	SHEET : SD–P08

GENERAL NOTES FOR ALLEYS AND DRIVEWAYS

1. CONCRETE FOR ALLEY RETURNS AND DRIVEWAYS SHALL HAVE A MINIMUM COMPRESSIVE STRENGTH AT 28 DAYS IDENTICAL TO THAT SPECIFIED FOR THE STREET PAVEMENT OR BASE WHEN BUILT AS COMPONENTS OF A CONCRETE PAVING PROJECT. WHEN BUILT SEPARATELY, THE STRENGTH SHALL BE AS SPECIFIED ON THE CONSTRUCTION PLAN.

2. SPACING AND CONSTRUCTION OF JOINTS SHALL CONFORM TO PARABOLIC STREET PAVEMENT.

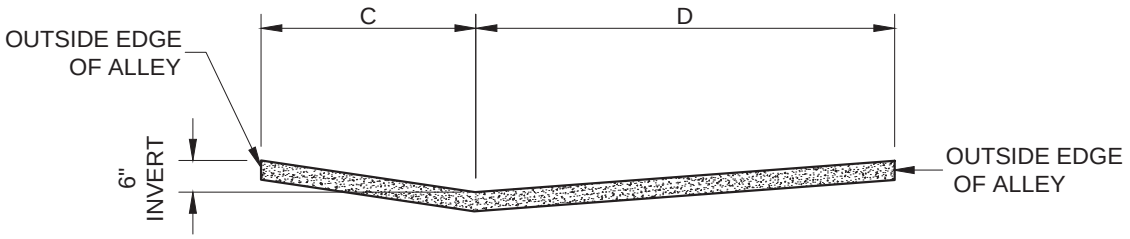

SECTION A

SCALE N.T.S.

NOTE : ALLEY PAVING TO BE PLACED IN SHADED AREA
WHEN SCREENING WALL IS ALONG PROPERTY LINE.
SEE COA SCREENING WALL DETAIL.

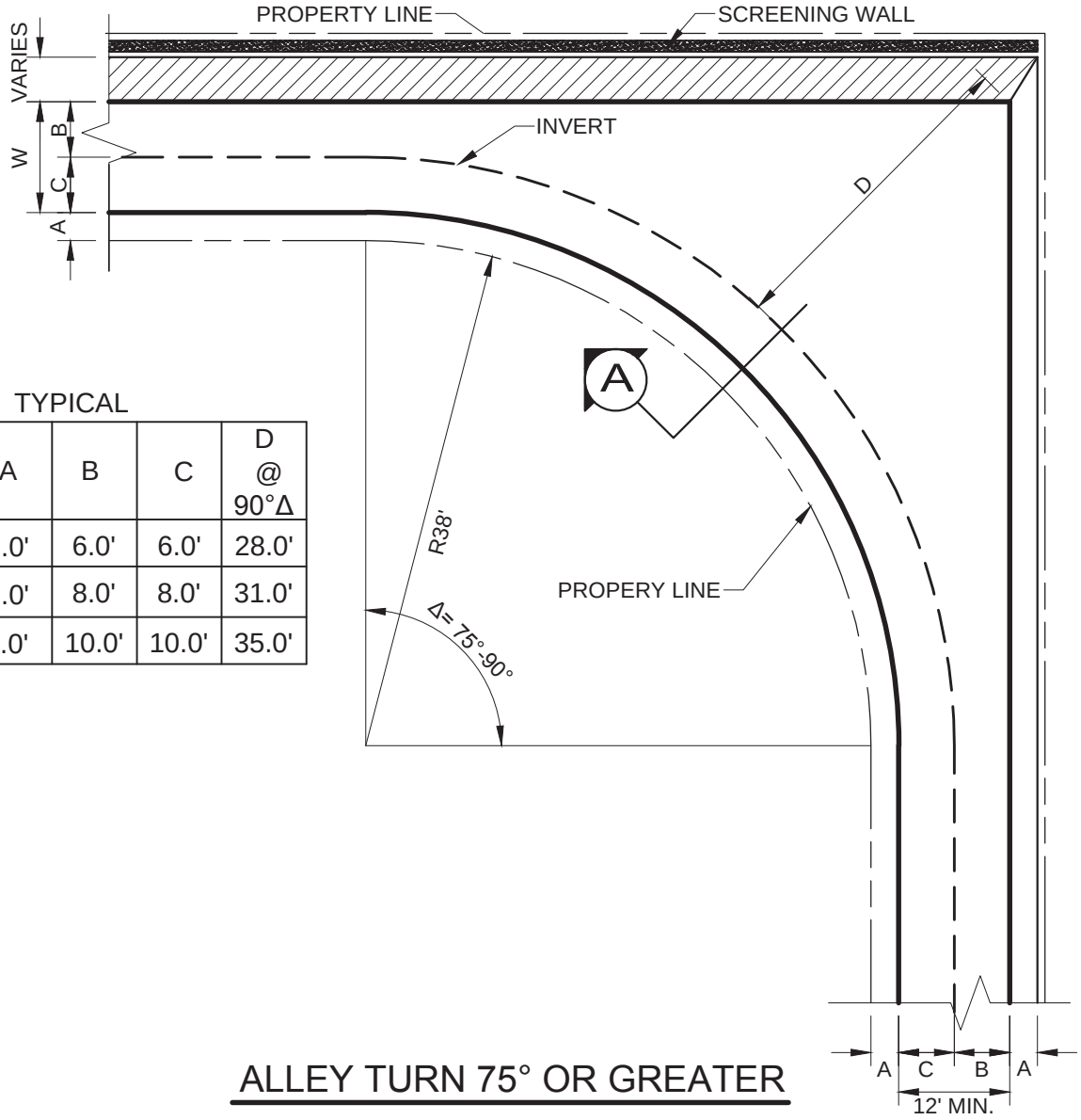

TYPICAL

ALLEY WIDTH (W)	A	B	C	D @ 90°Δ
12'	2.0'	6.0'	6.0'	28.0'
16'	2.0'	8.0'	8.0'	31.0'
20'	2.0'	10.0'	10.0'	35.0'

ALLEY TURN 75° OR GREATER

CITY OF ALLEN DEPARTMENT OF ENGINEERING	ALLEY TURN 75° OR GREATER	STANDARD CONSTRUCTION DETAILS PAVING	
		DATE: SEPT 1991	REV DATE: AUG. 2006	SHEET : SD-P10

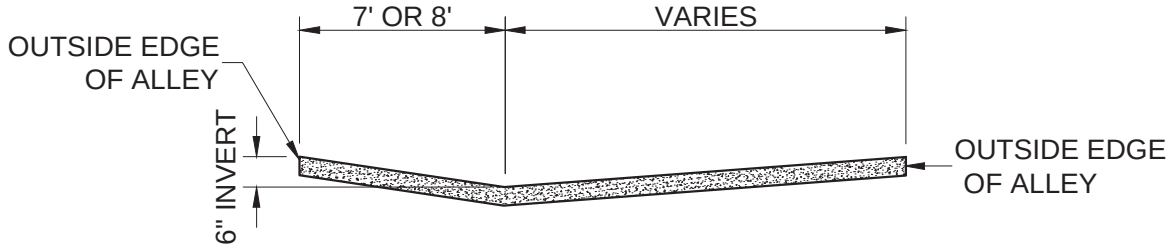

SECTION A

SCALE N.T.S.

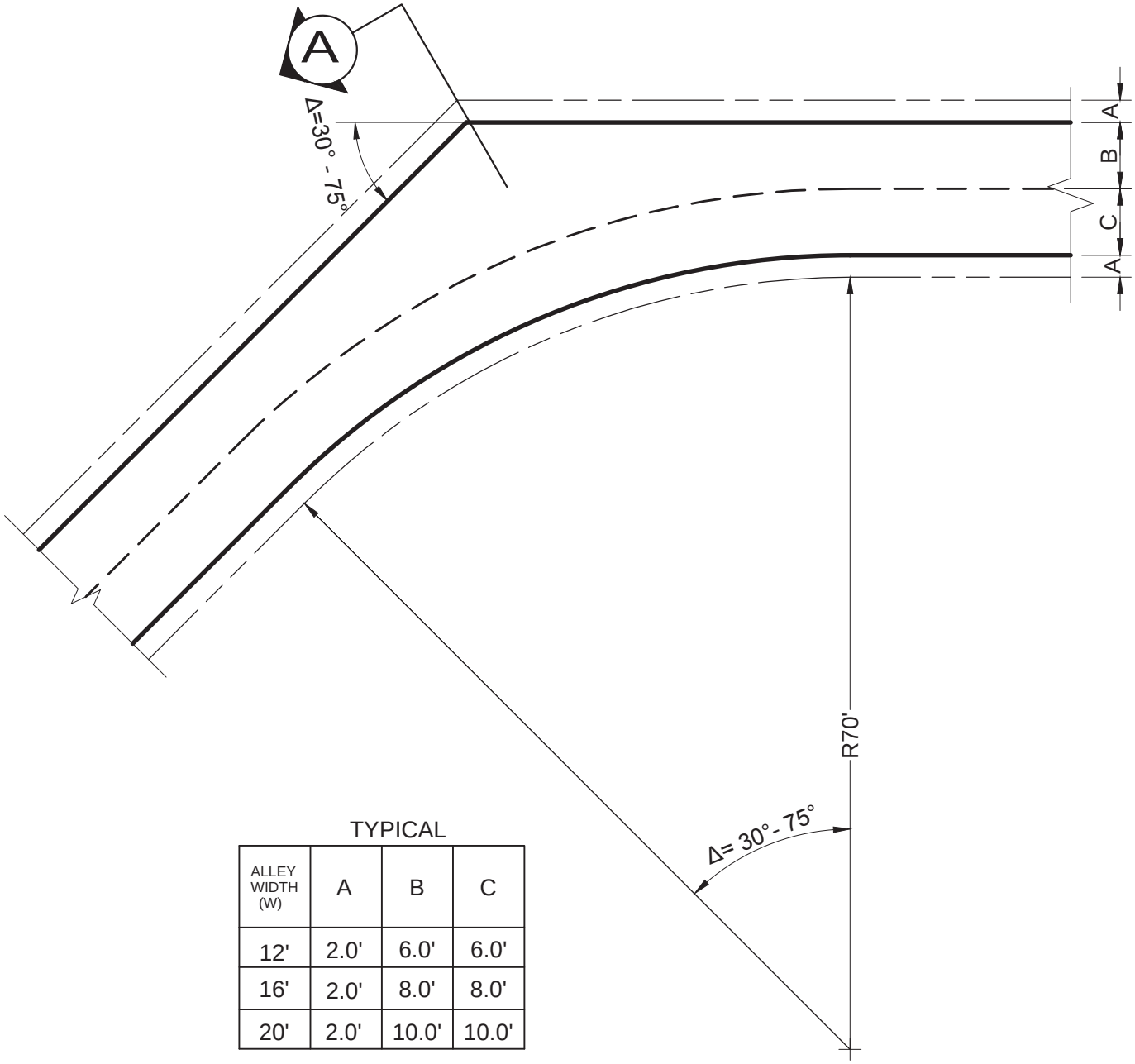

TYPICAL

ALLEY WIDTH (W)	A	B	C
12'	2.0'	6.0'	6.0'
16'	2.0'	8.0'	8.0'
20'	2.0'	10.0'	10.0'

ALLEY TURN 30° - 75°

NTS

CITY OF ALLEN DEPARTMENT OF ENGINEERING	ALLEY TURN 30° - 75°	STANDARD CONSTRUCTION DETAILS PAVING	
		DATE: SEPT 1991	REV DATE: AUG. 2006	SHEET : SD-P11

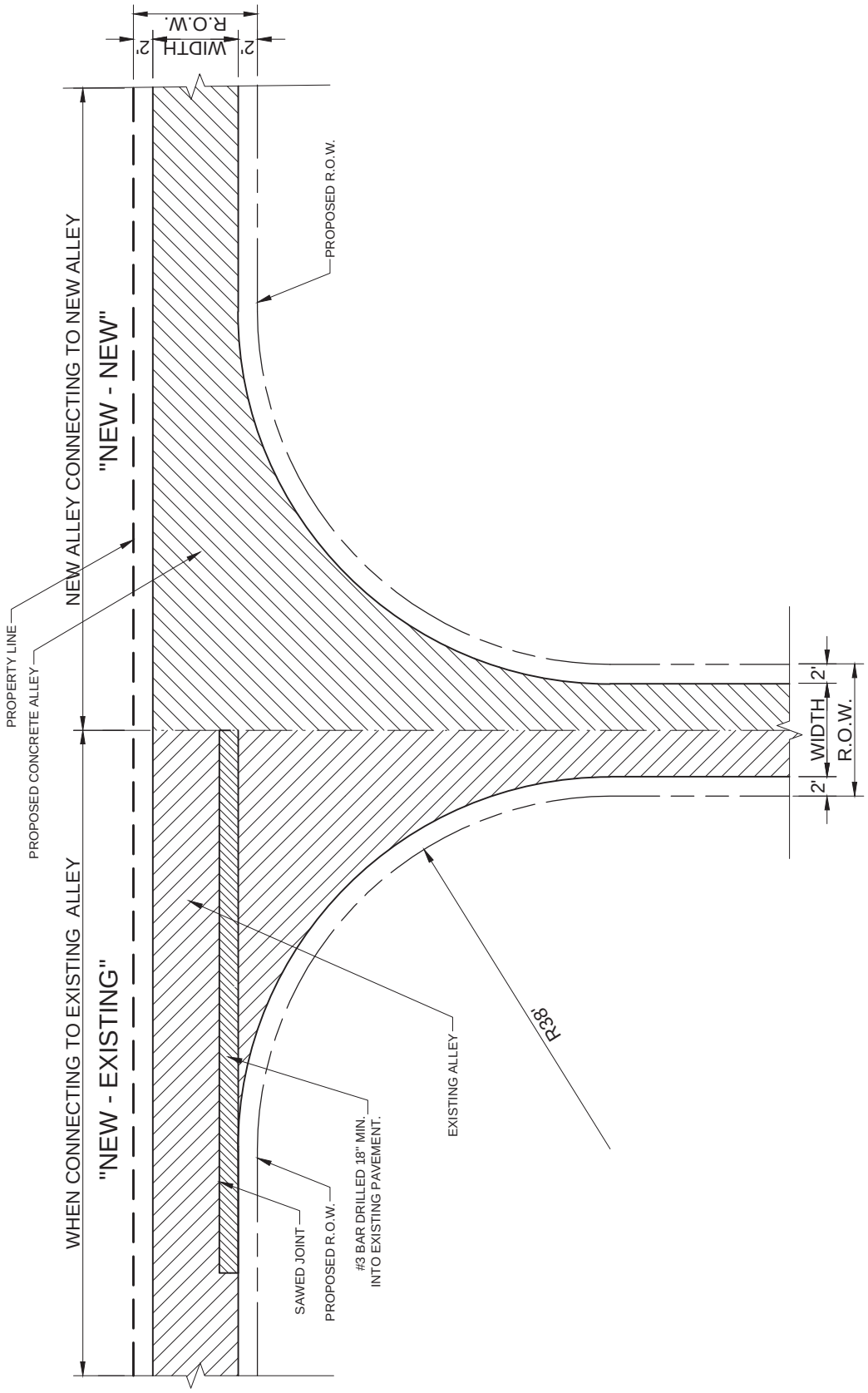

ALLEY INTERSECTING ALLEY

NTS

CITY OF ALLEN

DEPARTMENT OF ENGINEERING

ALLEY INTERSECTING ALLEY

STANDARD CONSTRUCTION DETAILS
PAVING

DATE:	REV DATE:	SHEET :
SEPT. 1991	AUG. 2006	SD-P12

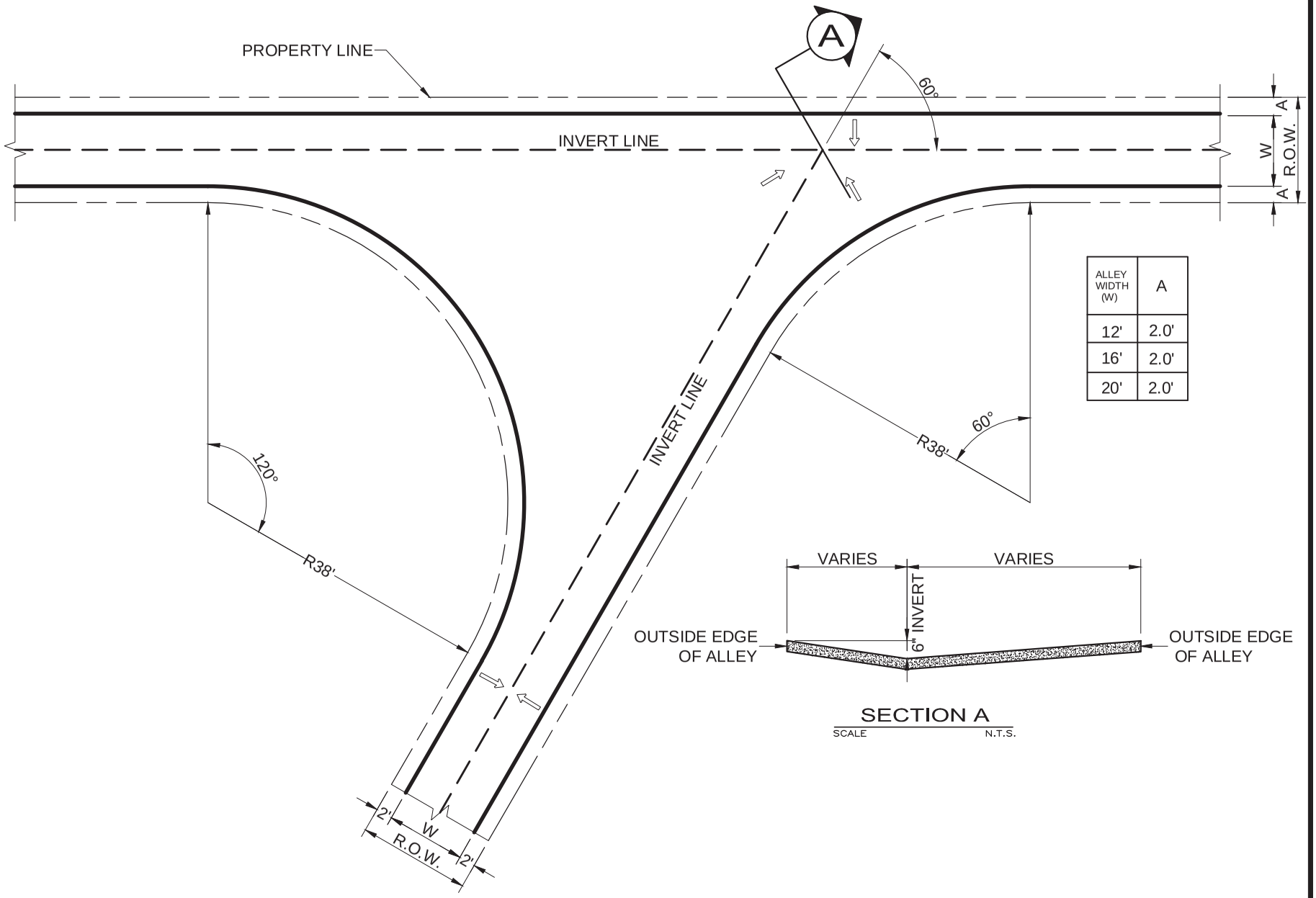

ALLEY WIDTH (W)	A
12'	2.0'
16'	2.0'
20'	2.0'

SECTION A
SCALE N.T.S.

ALLEY TURN 60° - 120°
NTS

CITY OF ALLEN
DEPARTMENT OF ENGINEERING

ALLEY TURN 60° - 120°

STANDARD CONSTRUCTION DETAILS
PAVING

DATE: SEPT 1991

REV DATE: AUG. 2006

SHEET : SD-P13

CITY OF ALLEN
DEPARTMENT OF ENGINEERING

RAMPS WITHOUT TRUNCATED DOMES

DRIVEWAY/ ALLEY WIDTH	A	B	C
12'	12'	2'-0"	16'
16'	16'	2'-0"	20'
20'	20'	2'-0"	24'

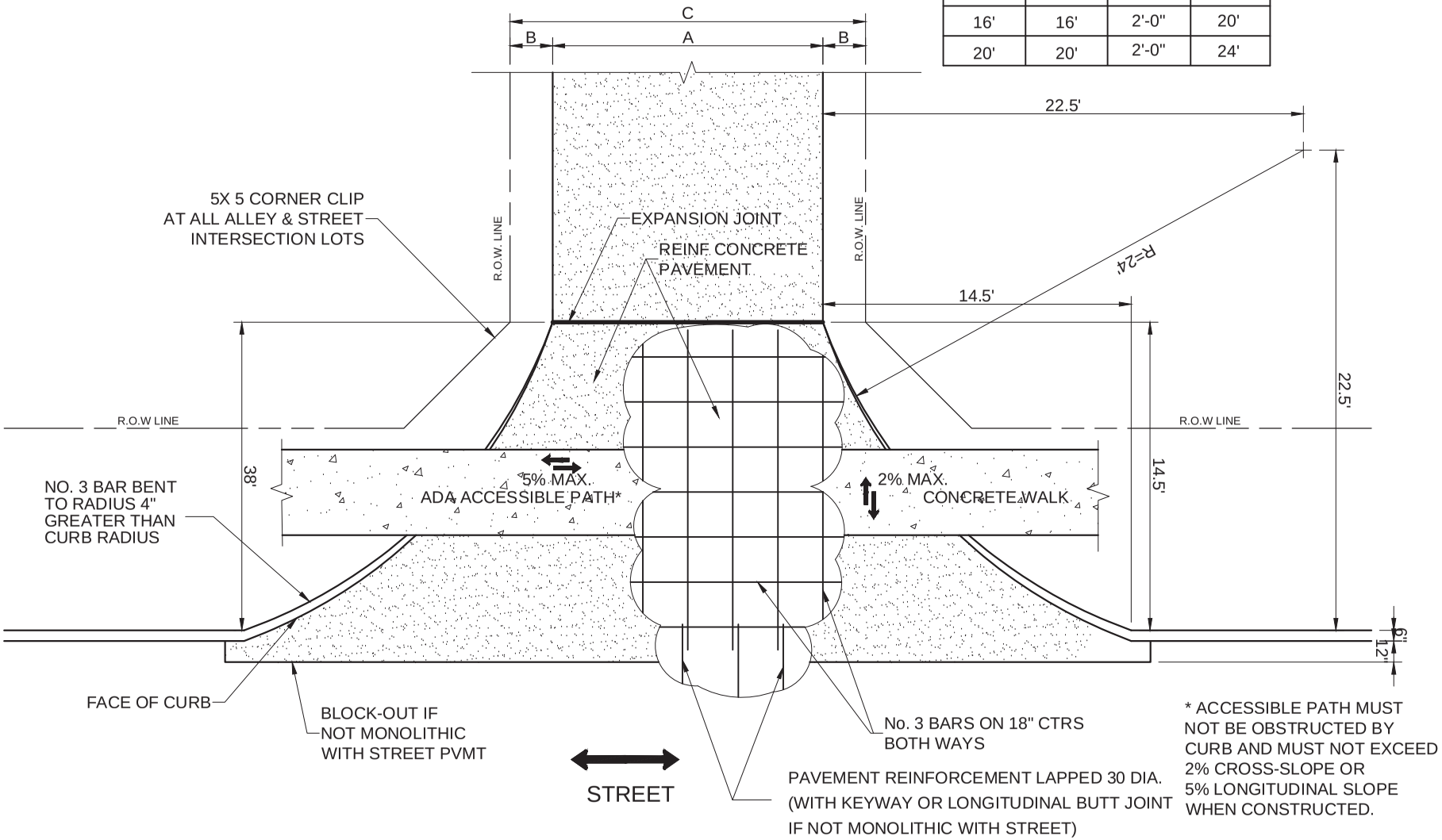

* ACCESSIBLE PATH MUST NOT BE OBSTRUCTED BY CURB AND MUST NOT EXCEED 2% CROSS-SLOPE OR 5% LONGITUDINAL SLOPE WHEN CONSTRUCTED.

ALLEY RETURN DETAILS

SCALE N.T.S.

NOTE:
THIS APPLICATION APPLIES TO RAMPS AT NON-SIGNALIZED COMMERCIAL DRIVEWAYS & ALLEYS

	CONSTRUCTED MAX.
CROSS SLOPE	2%
RUNNING SLOPE	5% WHEN ADJACENT STREET ≤ 5%

STANDARD CONSTRUCTION DETAILS
PAVING

DATE: SEPT. 1991
REV DATE: MAY 2013
SHEET : SD-P14

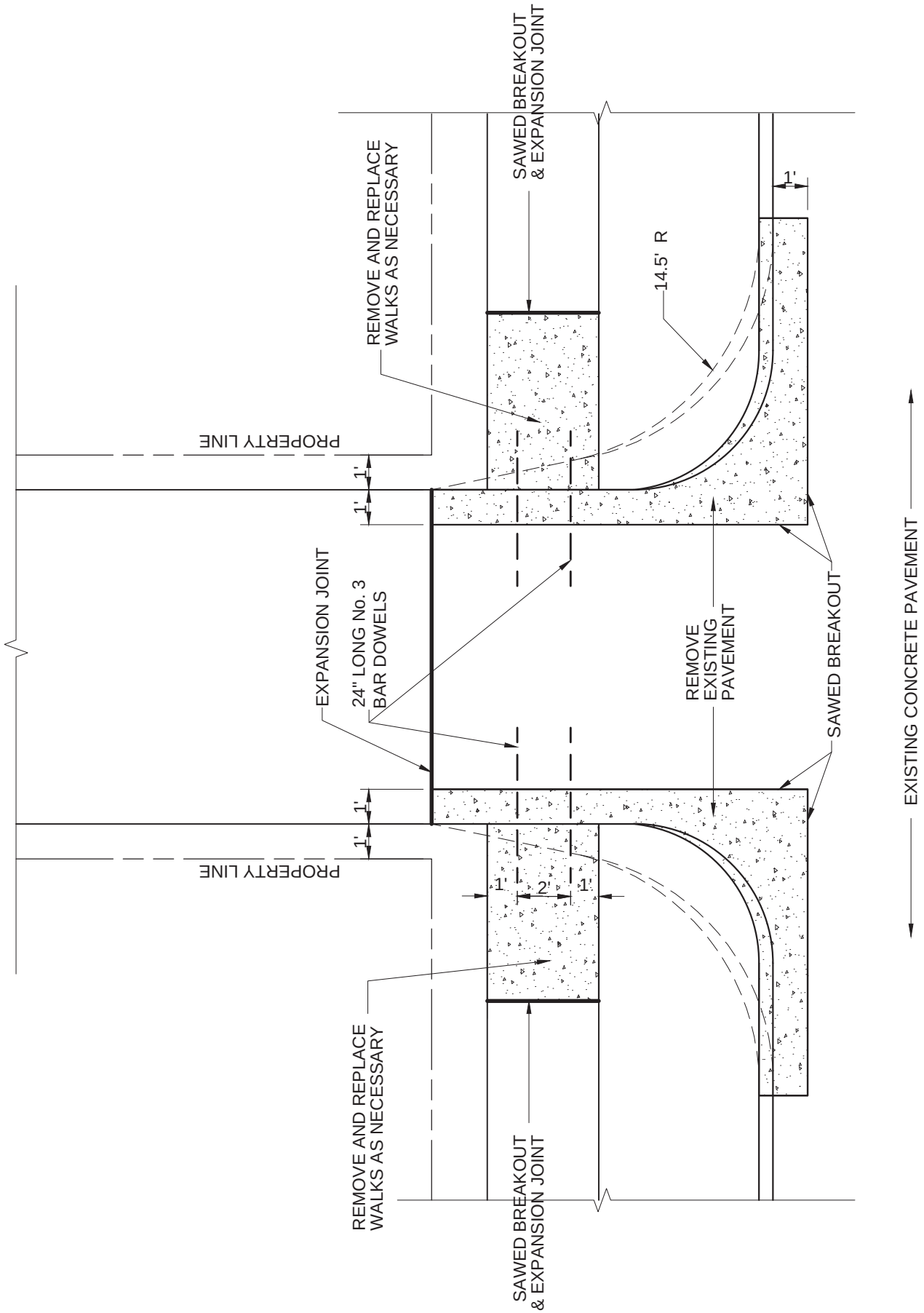

RETURN AT CONCRETE STREET

NTS

CITY OF ALLEN
DEPARTMENT OF ENGINEERING

EXISTING ALLEY
RETURN MODIFICATIONS
(CONCRETE)

STANDARD CONSTRUCTION DETAILS
PAVING

DATE:	REV DATE:	SHEET :
SEPT. 1991	AUG. 2006	SD-P15

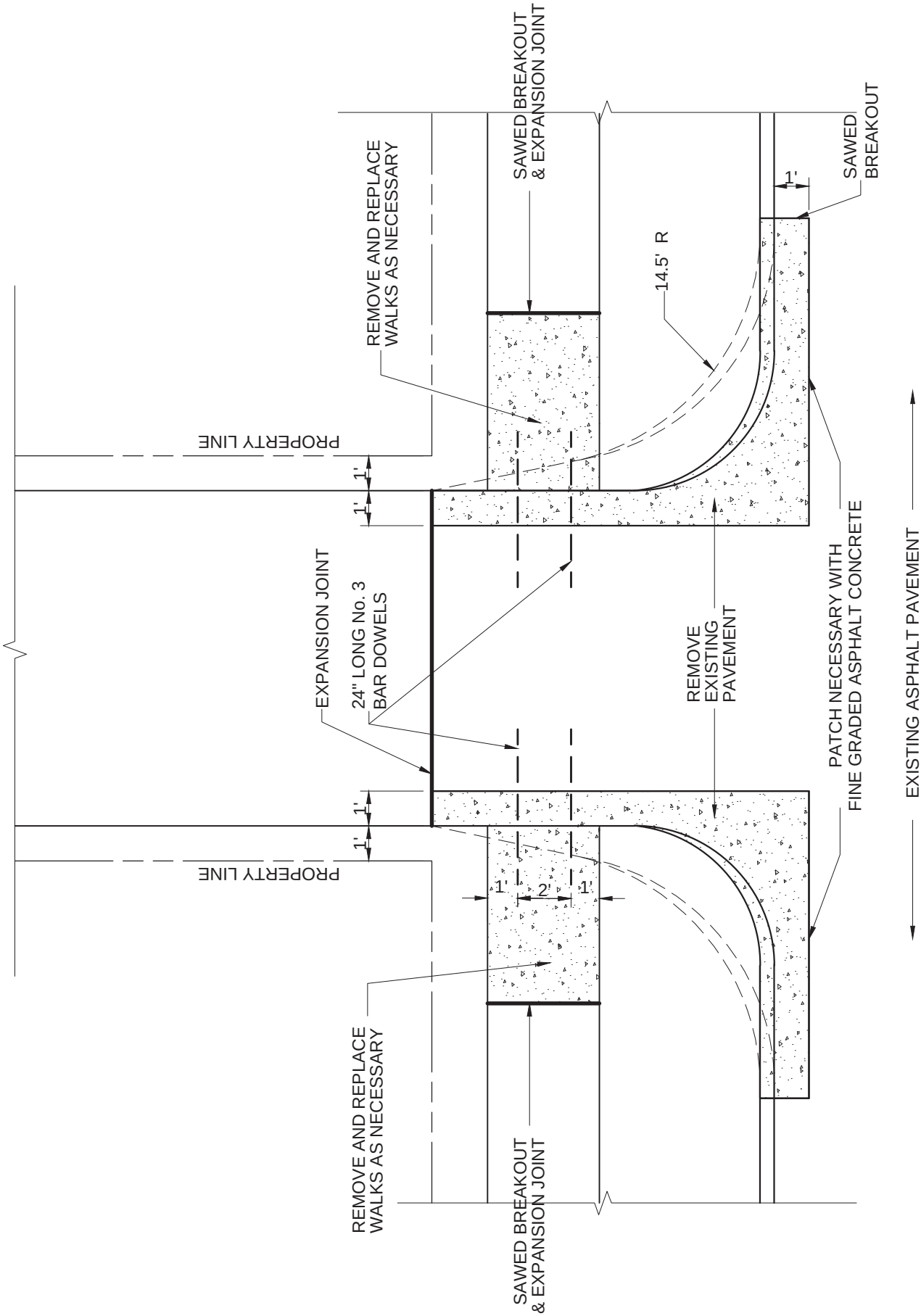

RETURN AT ASPHALT STREET
WITH CONCRETE CURB AND GUTTER

NTS

CITY OF ALLEN
DEPARTMENT OF ENGINEERING

EXISTING ALLEY
RETURN MODIFICATIONS
(ASPHALT)

STANDARD CONSTRUCTION DETAILS
PAVING

DATE:	REV DATE:	SHEET :
SEPT. 1991	AUG. 2006	SD-P16

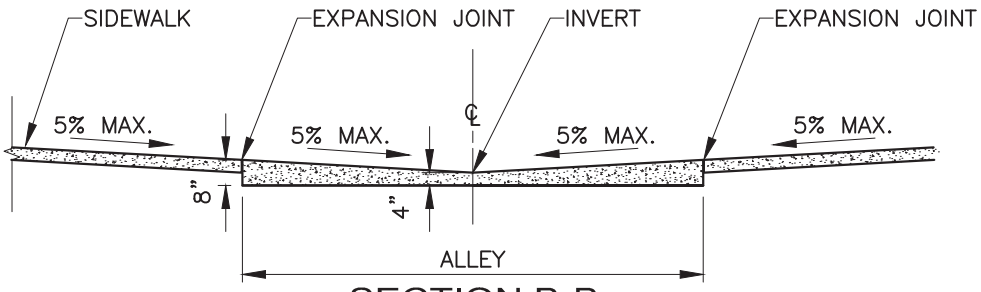

SECTION B-B

SCALE 1"=5'

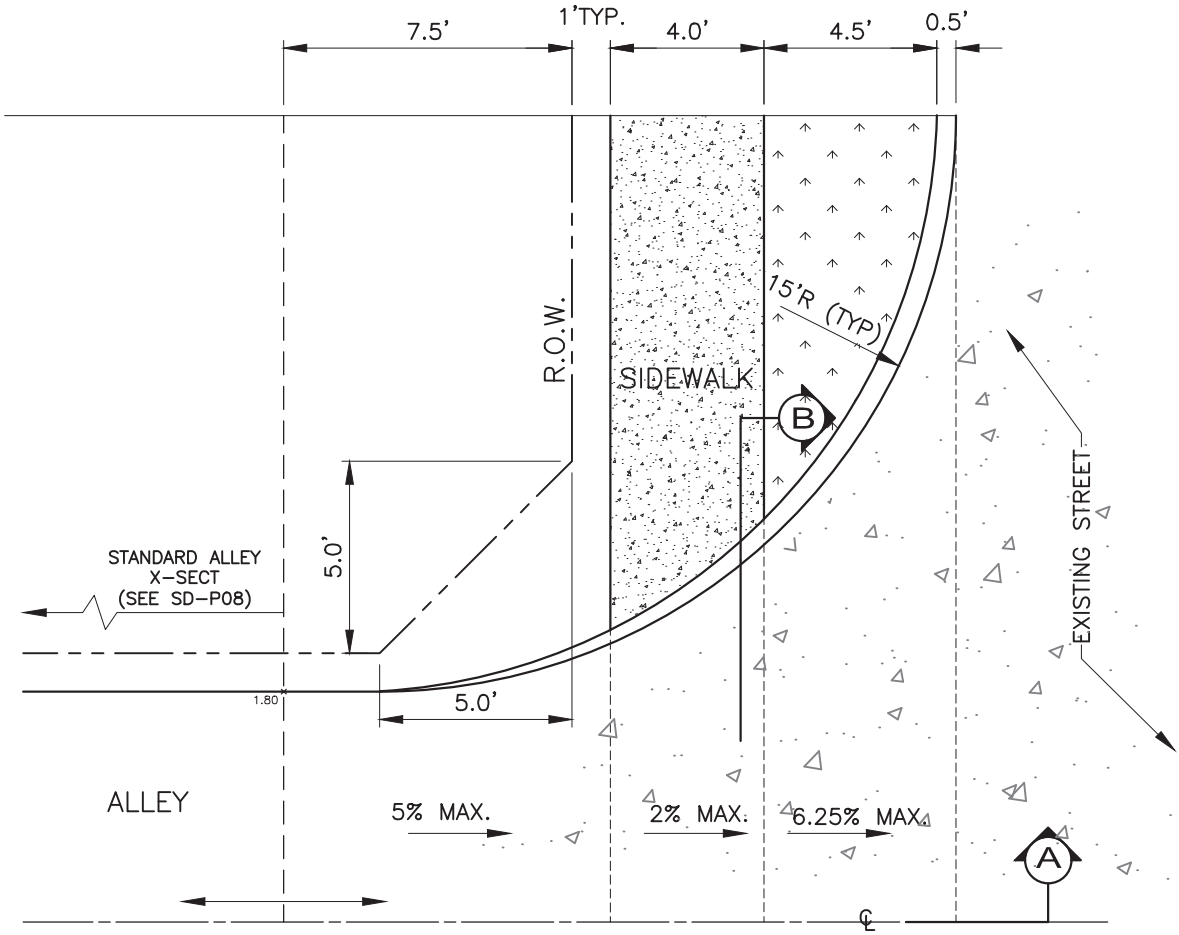

PLAN VIEW

SCALE 1"=5'

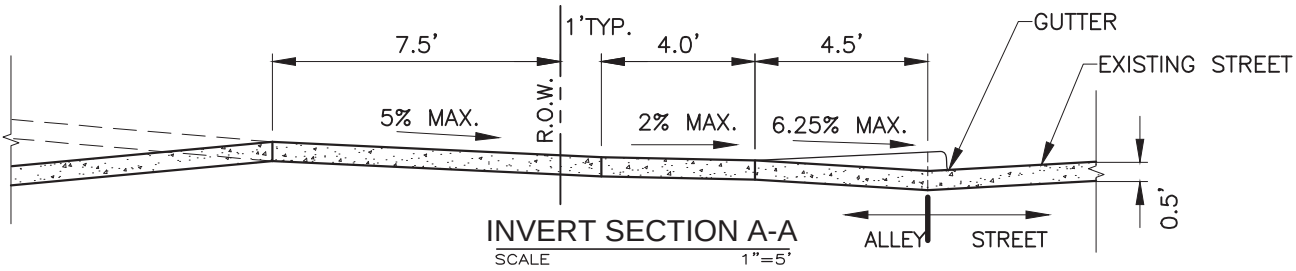

INVERT SECTION A-A

SCALE 1"=5'

ALLEY ENTRANCE INVERT TRANSITION
FOR ACCESSIBILITY

CITY OF ALLEN DEPARTMENT OF ENGINEERING	ALLEY ENTRANCE ONTO EXISTING STREET	STANDARD CONSTRUCTION DETAILS PAVING		
		DATE: SEPT. 1991	REV DATE: MAY. 2012	SHEET : SD-P17

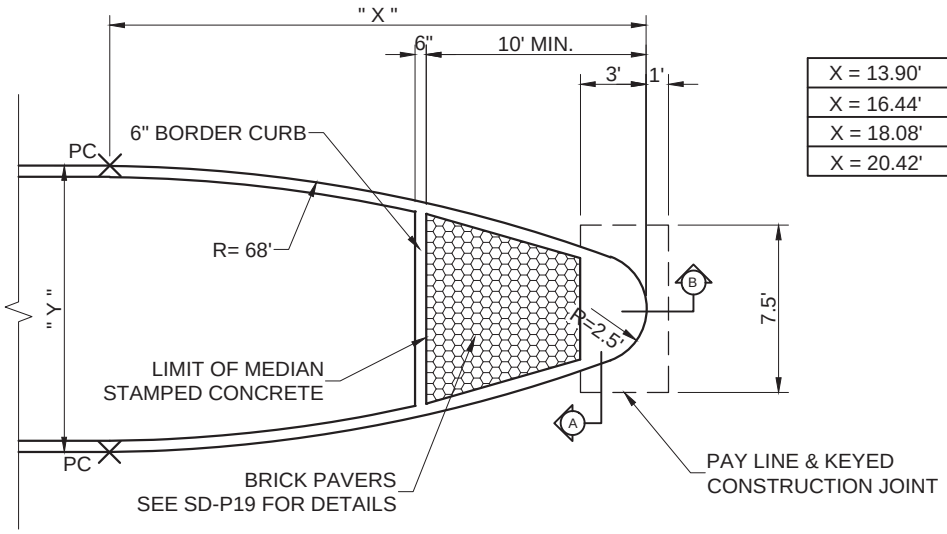

DETAIL FOR MEDIAN WIDER THAN 6' (Y>6')

SCALE : NTS

DIMENSIONS OF MEDIAN NOSE

X = 13.90'	Y = 7.0'	X = 26.36'	Y = 14.0'
X = 16.44'	Y = 8.0'	X = 29.89'	Y = 17.0'
X = 18.08'	Y = 9.0'	X = 32.93'	Y = 20.0'
X = 20.42'	Y = 10.0'	X = 36.47'	Y = 24.0'

NOTES:

1. CONTRACTOR MAY USE STAMPED COLORED CONCRETE. IF APPROVED BY ENGINEER.
2. COLOR & PATTERN SHALL MATCH EXISTING.
3. COLOR MIX SHALL BE UNIFORMLY COLORED THROUGHOUT AND NOT SPRAYED, OVERLAYED OR OTHERWISE APPLIED TO TOP LAYERS.
4. CONTRACTOR SHALL FURNISH ONE 4'X4'X4" SAMPLE FOR CITY APPROVAL& HAUL OFF AFTER APPROVAL. CONSTRUCT STAMPED CONCRETE OVER 4" COMPACTED SAND.

*IF NO EXISTING TO MATCH, PATTERN SHALL BE KEYSTONE & COLOR BLACK-FLASHED RED.

STAMP CONCRETE FORM LITHOTEX #3560, LIGONIER STONE & LIME OCTAGON SLATE OR APPROVED EQUAL CONCRETE SHALL BE VICTORIAN RED WITH DARK GRAY OVERLAY TO MATCH BRICK PAVERS.

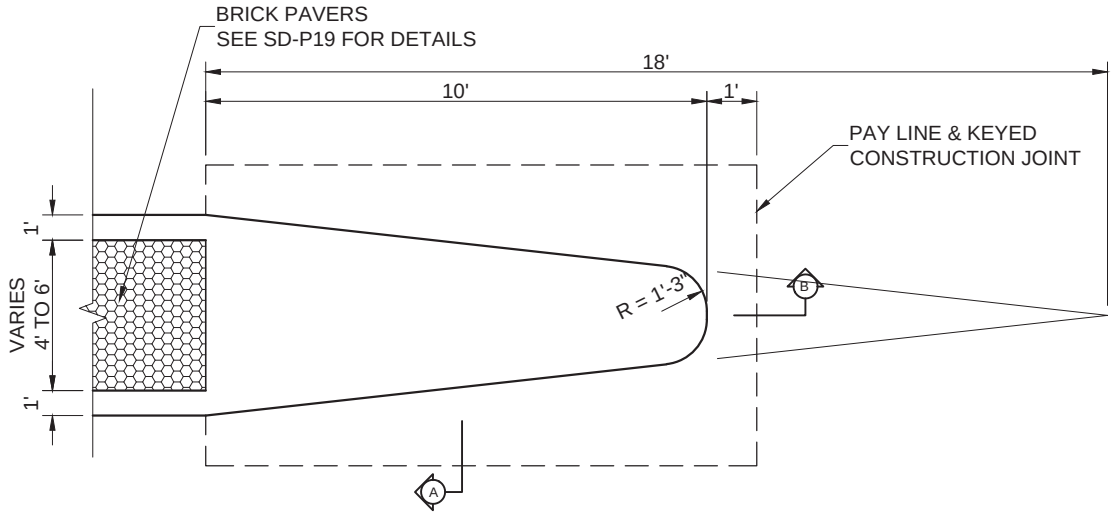

DETAIL FOR MEDIAN 4'-0" to 6'-0"

SCALE : NTS

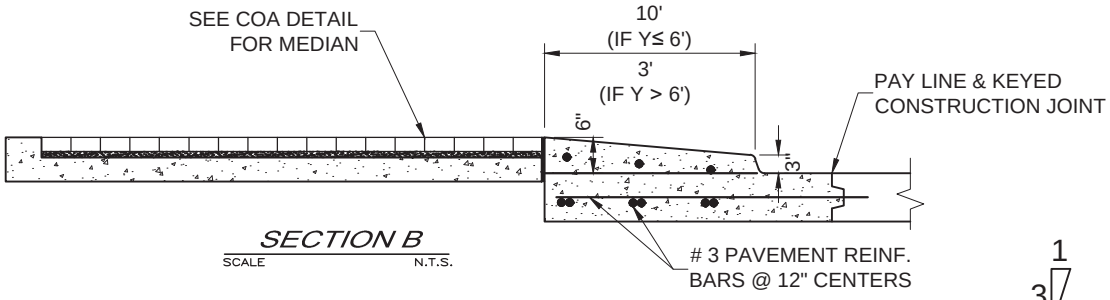

SECTION B

SCALE N.T.S.

NOTE :
MONOLITHIC MEDIAN NOSE & PAVEMENT SHALL BE PAID FOR PER EACH COMPLETE IN PLACE.

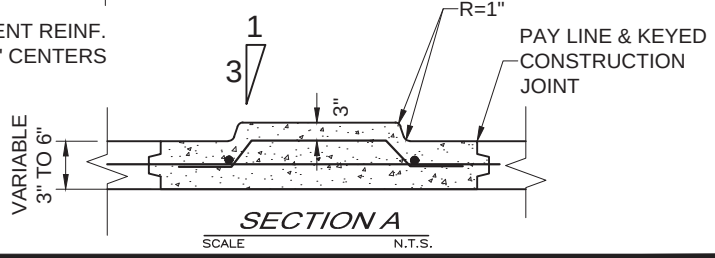

SECTION A

SCALE N.T.S.

CITY OF ALLEN
DEPARTMENT OF ENGINEERING

MEDIAN DETAILS

STANDARD CONSTRUCTION DETAILS
PAVING

DATE:	REV DATE:	SHEET :
SEPT. 1991	MAY 2013	SD-P18

6cm. (2 - 3/8") PAVING STONE

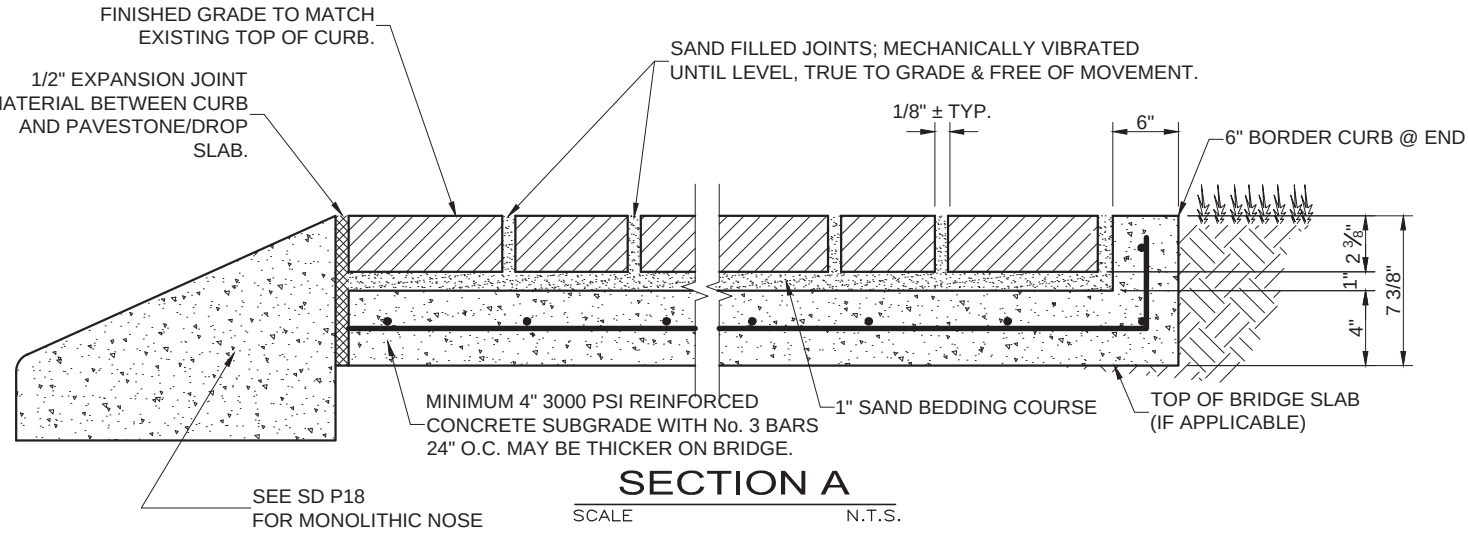

SECTION A

SCALE N.T.S.

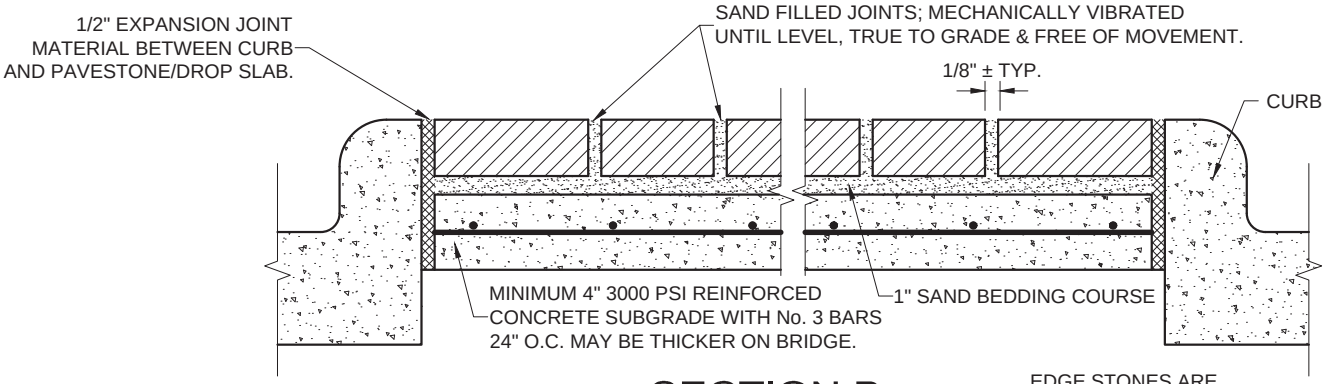

SECTION B

SCALE N.T.S.

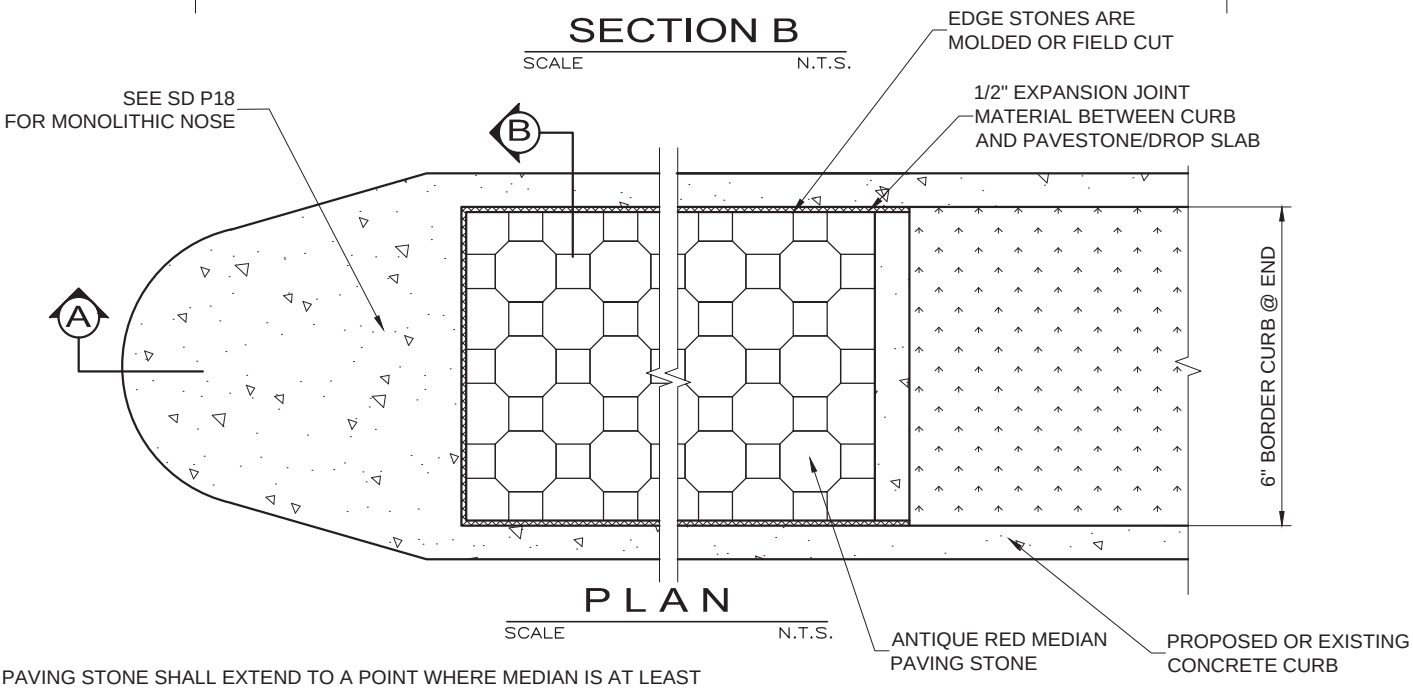

PLAN

SCALE N.T.S.

MEDIAN PAVING STONE SHALL EXTEND TO A POINT WHERE MEDIAN IS AT LEAST 6' WIDE. IF MEDIAN IS 6' WIDE, PAVING SHALL EXTEND 15' FROM NOSE. FOR MEDIANS WIDER THAN 6', PAVING SHALL EXTEND 10' FROM NOSE. ALL DISTANCES ARE MINIMUM.

PAVING STONE SHALL BE INTERLOCKING CONCRETE (BELGARD BRAND KEYLOC OR APPROVED EQUAL) PER ITEMS 2.3.7 AND 5.8.8 OF THE CITY OF ALLEN SPECIAL PROVISIONS AND SHALL BE RED/BLACK FLASHED IN COLOR.

CITY OF ALLEN DEPARTMENT OF ENGINEERING	MEDIAN PAVING STONE DETAIL	STANDARD CONSTRUCTION DETAILS PAVING		
		DATE: SEPT. 1991	REV DATE: AUG. 2006	SHEET : SD-P19

CITY OF ALLEN
DEPARTMENT OF ENGINEERING

MEDIAN MAINTENANCE ACCESS
(MEDIAN CURB LAY-DOWN)

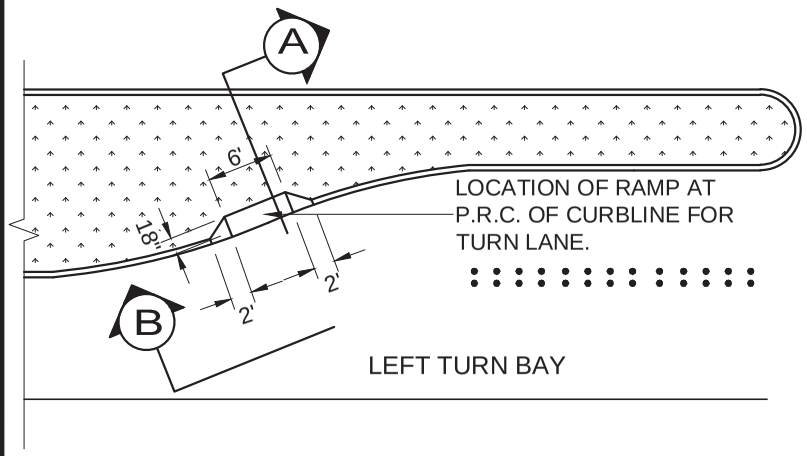

PLAN
SCALE N.T.S.

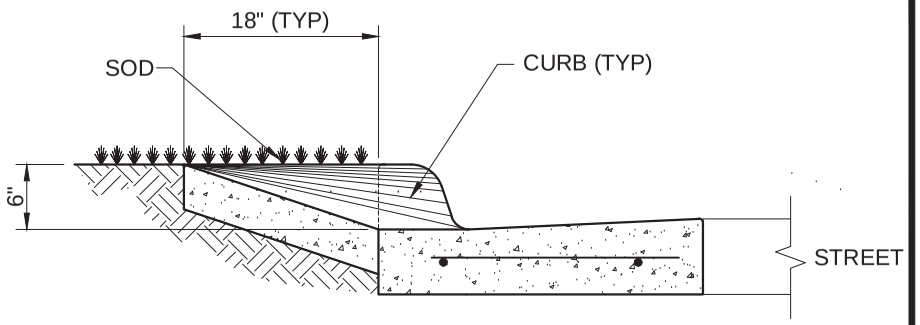

SECTION A
SCALE N.T.S.

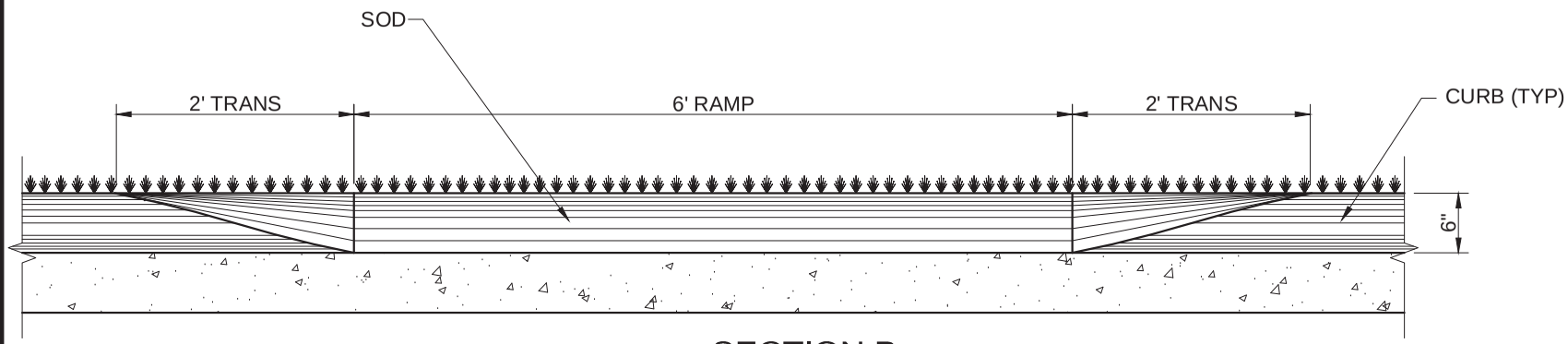

SECTION B
SCALE N.T.S.

GENERAL NOTES :

1. MAXIMUM ONE RAMP PER MEDIAN.
2. EXCEPTION - MEDIAN LAY DOWN SHALL NOT BE REQUIRED AT END OF MEDIAN WITH BRICK OR PAVERS. (WIDTH < 6') BUT SHALL BE REQUIRED AT OTHER END.
3. POUR SHALL BE INTEGRAL.

STANDARD CONSTRUCTION DETAILS
PAVING

DATE: SEPT. 1991
REV DATE: MAY 2013
SHEET : SD-P20

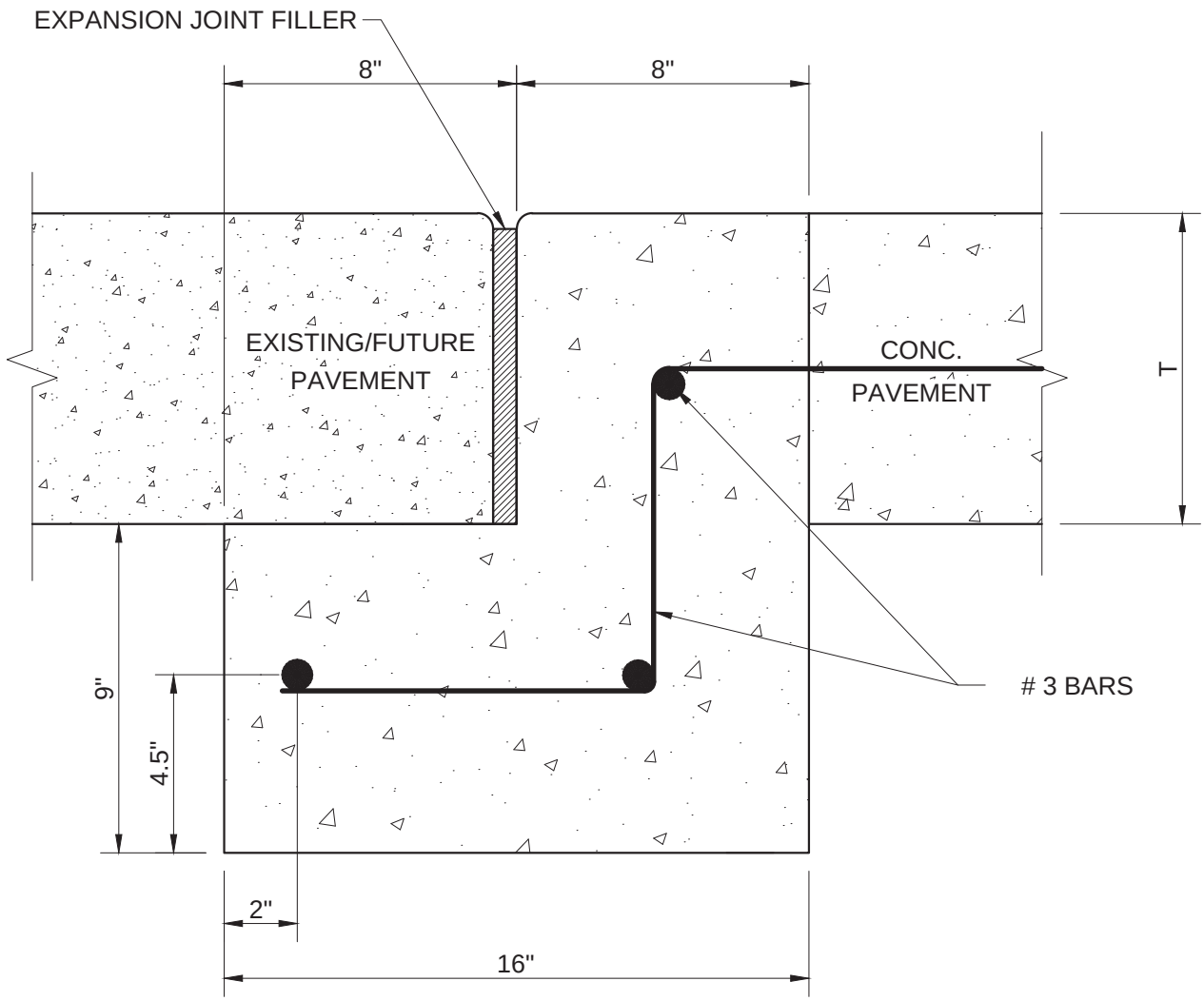

STREET HEADER

SCALE N.T.S.

PAVEMENT BARS TO BE BENT DOWN INTO HEADER.
HEADER AND PAVEMENT TO BE MONOLITHIC.

CITY OF ALLEN DEPARTMENT OF ENGINEERING	STREET HEADER	STANDARD CONSTRUCTION DETAILS PAVING		
		DATE: MAY 1991	REV DATE: AUG. 2006	SHEET : SD-P21

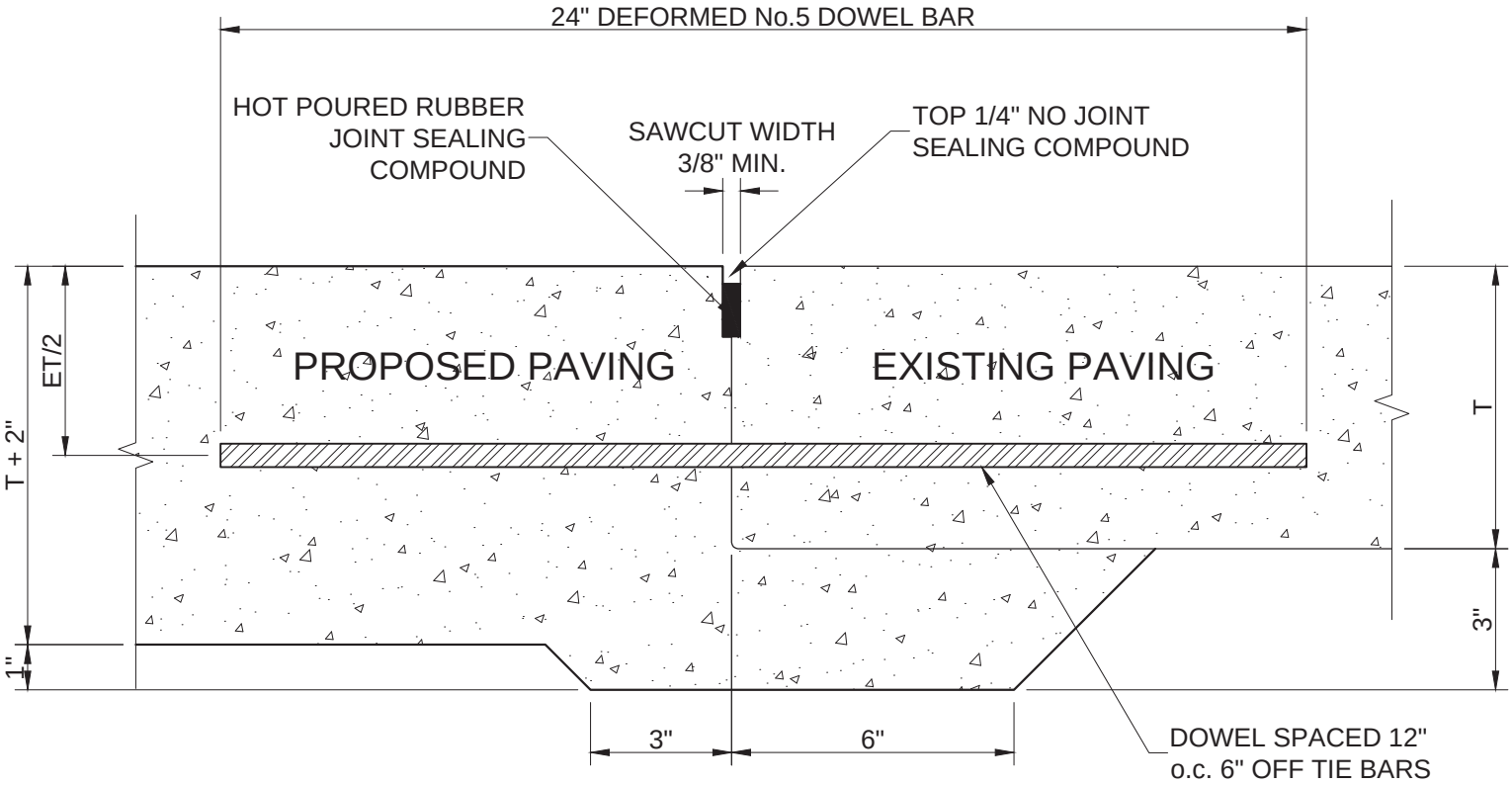

NOTE:
DOWEL BARS SHALL BE DRILLED INTO PAVEMENT HORIZONTALLY BY USE OF A MECHANICAL RIG. DRILLING BY HAND IS NOT ACCEPTABLE. PUSHING DOWEL BARS INTO GREEN CONCRETE IS NOT ACCEPTABLE.

CITY OF ALLEN DEPARTMENT OF ENGINEERING	PAVEMENT REPAIR HEADER	STANDARD CONSTRUCTION DETAILS PAVING		
		DATE: JULY 1991	REV DATE: AUG. 2006	SHEET : SD-P22

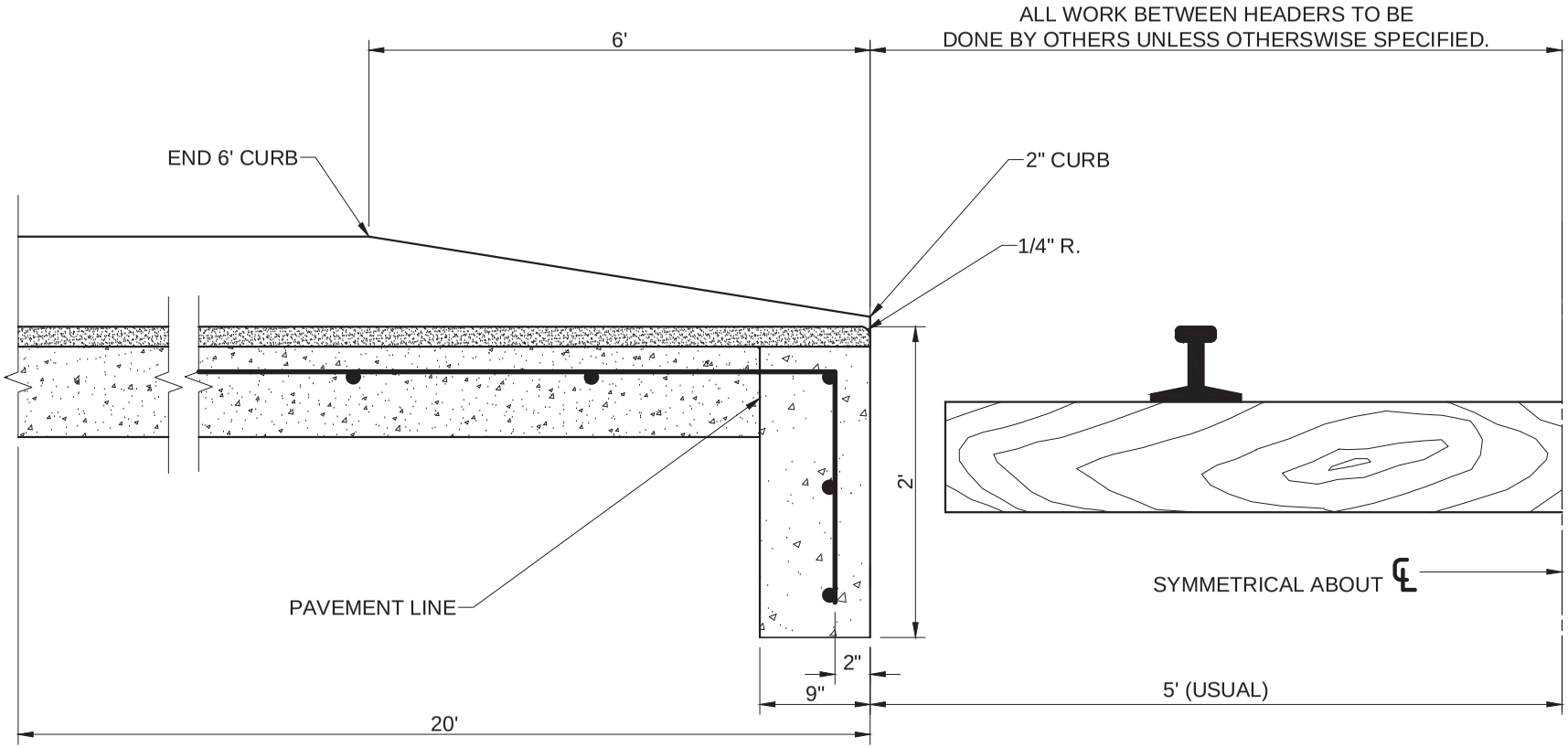

NOTE :

1. PAVEMENT BARS TO BE BENT DOWN INTO HEADER.
2. HEADER AND PAVEMENT TO BE MONOLITHIC.

RAIL HEADER

SCALE N.T.S.

CITY OF ALLEN
DEPARTMENT OF ENGINEERING

RAIL HEADER

STANDARD CONSTRUCTION DETAILS
PAVING

DATE: SEPT. 1991

REV DATE: AUG. 2006

SHEET : SD-P23

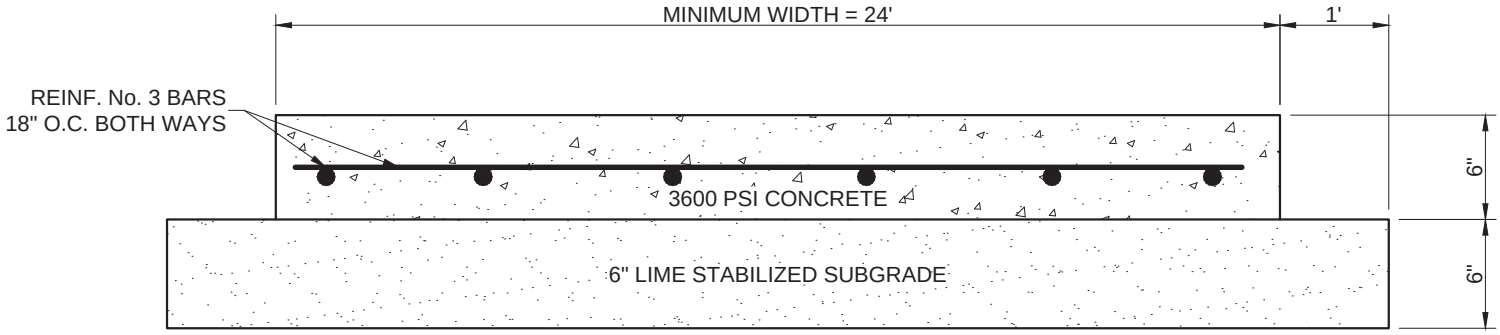

NOTES:

1. DOWELS & REBARS SHALL BE SUPPORTED BY AN APPROVED DEVICE.
2. EXPANSION JOINTS TO BE THE SAME AS USED FOR CONCRETE STREET PAVING.
3. SAWED TRANSVERSE DUMMY JOINT SHALL BE SPACED 20'-0"
4. EXPANSION JOINT DISTANCE AT 100' INTERVAL & SAWED JOINT AT 20'-0"

FIRE LANE PAVING

SCALE NTS

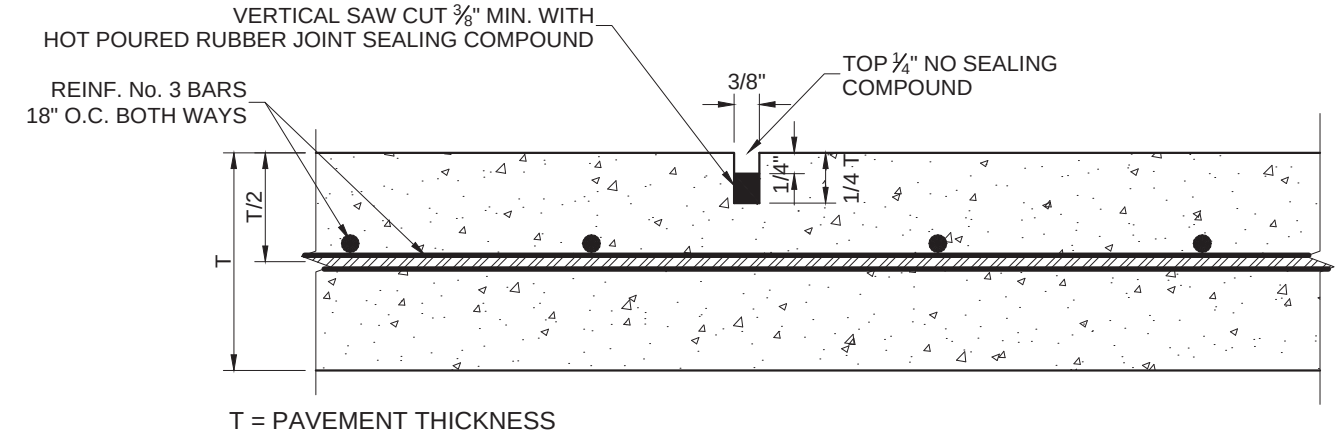

T = PAVEMENT THICKNESS

SAWED DUMMY JOINT

SCALE NTS

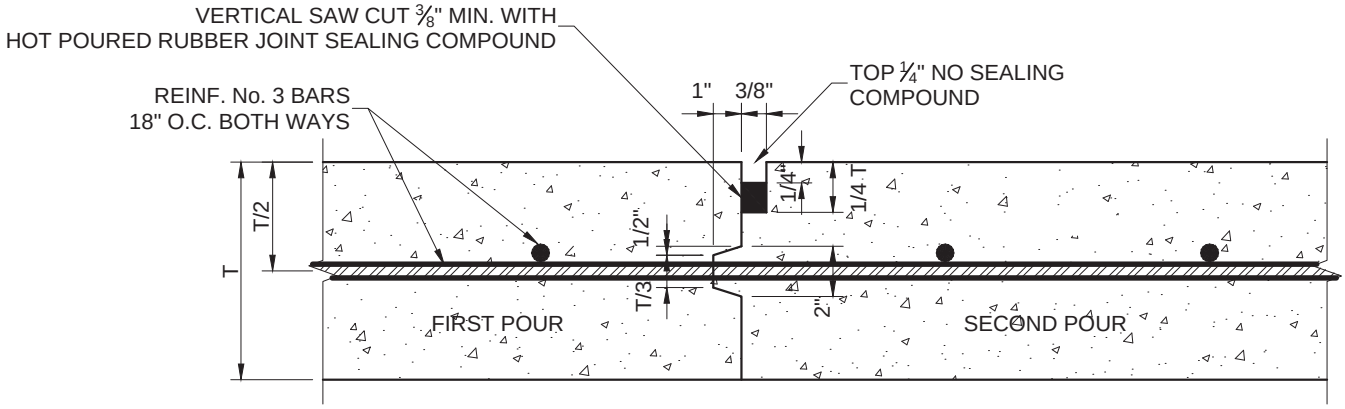

T = PAVEMENT THICKNESS

CONSTRUCTION JOINT FOR PAVEMENT

SCALE NTS

TRANSVERSE AND LONGITUDINAL JOINTS

NOTE:
CONTRACTOR SHALL PROTECT KEYWAY PRIOR TO SECOND POUR. IF LONGITUDINAL KEYWAY IS DAMAGED, CONTRACTOR SHALL REPAIR WITH THE USE OF LONGITUDINAL BUTT JOINT. DRILL AND GROUT DOWELS INTO FIRST POUR.

CITY OF ALLEN DEPARTMENT OF ENGINEERING	FIRE LANE PAVING & JOINT DETAILS	STANDARD CONSTRUCTION DETAILS PAVING		
		DATE: SEPT. 1991	REV DATE: MAY 2013	SHEET : SD-P24

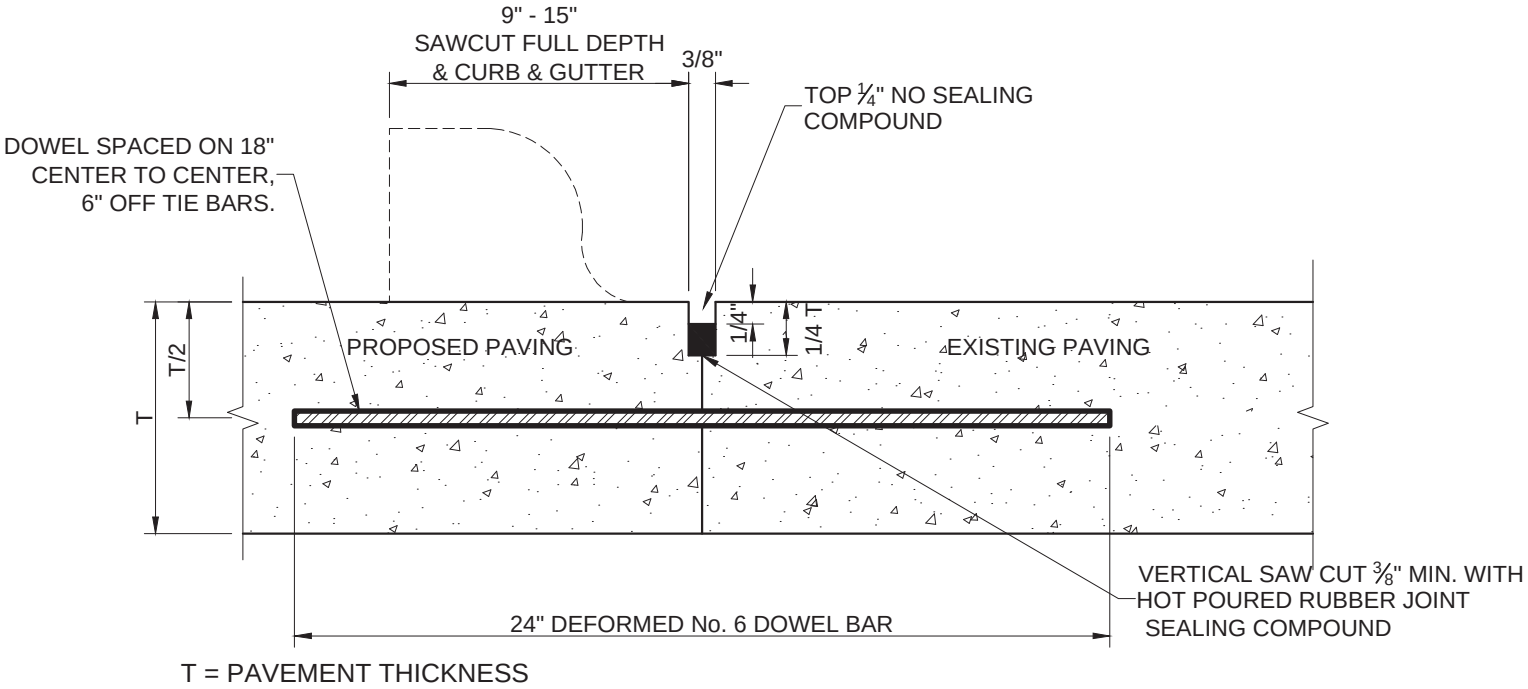

T = PAVEMENT THICKNESS

CONCRETE BUTT JOINT
(6"/7" PAVEMENT THICKNESS)

NOTES:

1. #5 DEFORMED DOWEL MAY BE USED FOR 5" PAVING.
   ALL OTHER PAVING THICKNESS SHALL USE DOWELS OF SIZE T/8.
2. LONGITUDINAL BUTT CONSTRUCTION MAY BE UTILIZED IN PLACE OF LONGITUDINAL HINGED (KEYWAY) JOINT AT CONTRACTORS OPTION.
3. DOWEL BARS SHALL BE DRILLED INTO PAVEMENT HORIZONTALLY BY USE OF A MECHANICAL RIG.
4. DRILLING BY HAND IS NOT ACCEPTABLE, PUSHING DOWEL BARS INTO GREEN CONCRETE NOT ACCEPTABLE.
5. SAWCUT WATER SHALL BE VACUUMED AND DISPOSED PROPERLY.
6. NO SAWCUT SHALL BE WITHIN 30" OF AN EXISTING JOINT, OTHERWISE REMOVE PAVEMENT TO NEAREST JOINT.

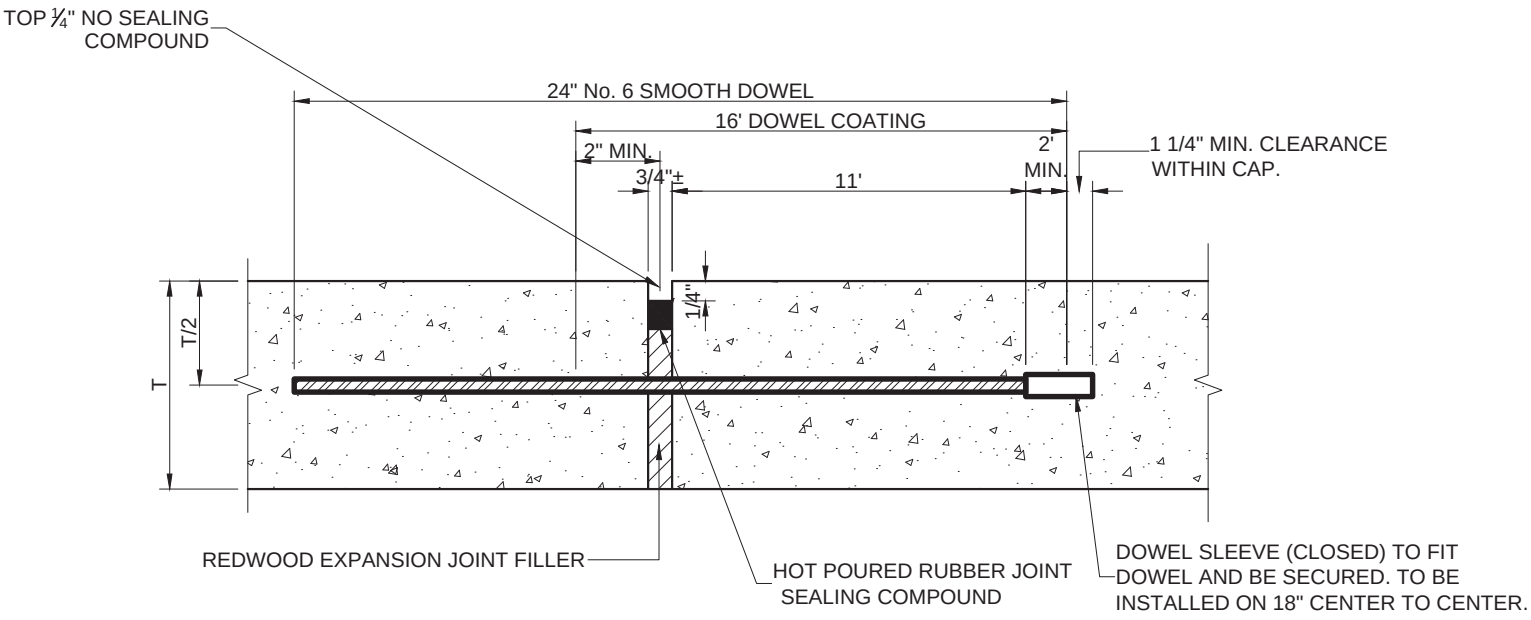

TRANSVERSE EXPANSION JOINT

(SPACED 600 FT. MAXIMUM, LOCATE AT INTERSECTIONS)
T = PAVEMENT THICKNESS

NOTES:

1. DOWELS AND REINFORCING BARS SHALL BE SUPPORTED BY AN APPROVED DEVICE & MUST BE TIED OR CHAIRED ON EACH SIDE.
2. EXPANSION JOINTS SHALL BE PLACED TRANSVERSELY IN PROPOSED PAVEMENT WHERE THICKNESS CHANGES, SUCH AS BETWEEN 5" -6".
3. EXPANSION JOINTS SHALL BE PLACED AT ALL END POINTS OF RADII.
4. HOT POURED RUBBER SEALING COMPOUND SHALL BE PLACED THROUGH RAISED CURB.

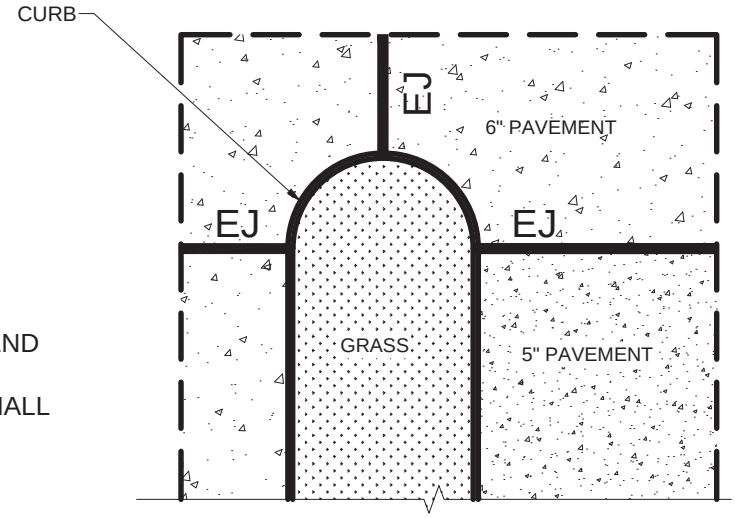

PARKING LOT EXAMPLE

CITY OF ALLEN DEPARTMENT OF ENGINEERING	TRANSVERSE EXPANSION JOINT	STANDARD CONSTRUCTION DETAILS PAVING		
		DATE: JAN 2001	REV DATE: MARCH 2016	SHEET : SD-P26

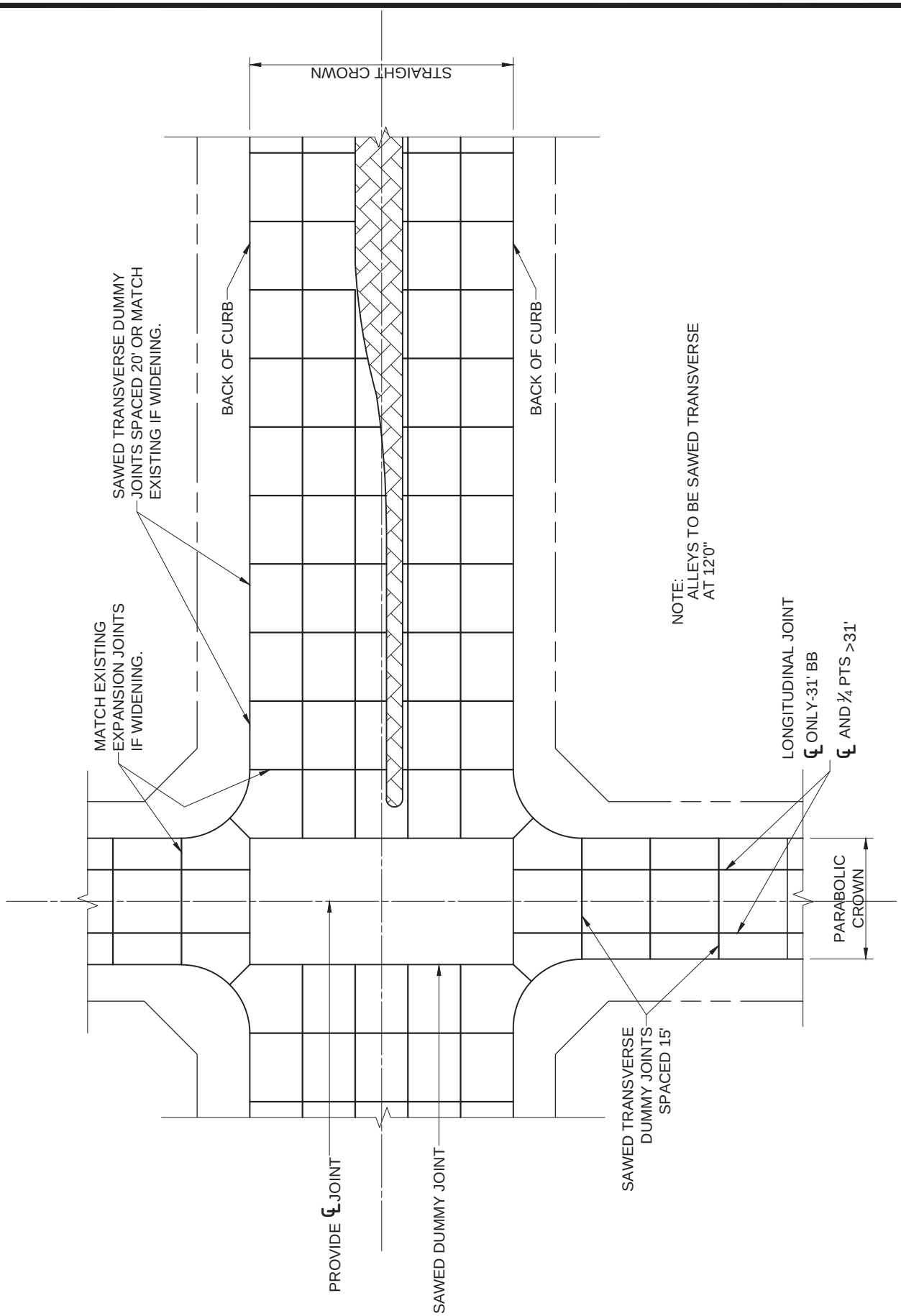

SPACING DIAGRAM FOR TRANSVERSE JOINTS

NTS

CITY OF ALLEN
DEPARTMENT OF ENGINEERING

SPACING DIAGRAM
FOR TRANSVERSE JOINTS

STANDARD CONSTRUCTION DETAILS
PAVING

DATE:	REV DATE:	SHEET :
SEPT 2001	AUG. 2006	SD-P27

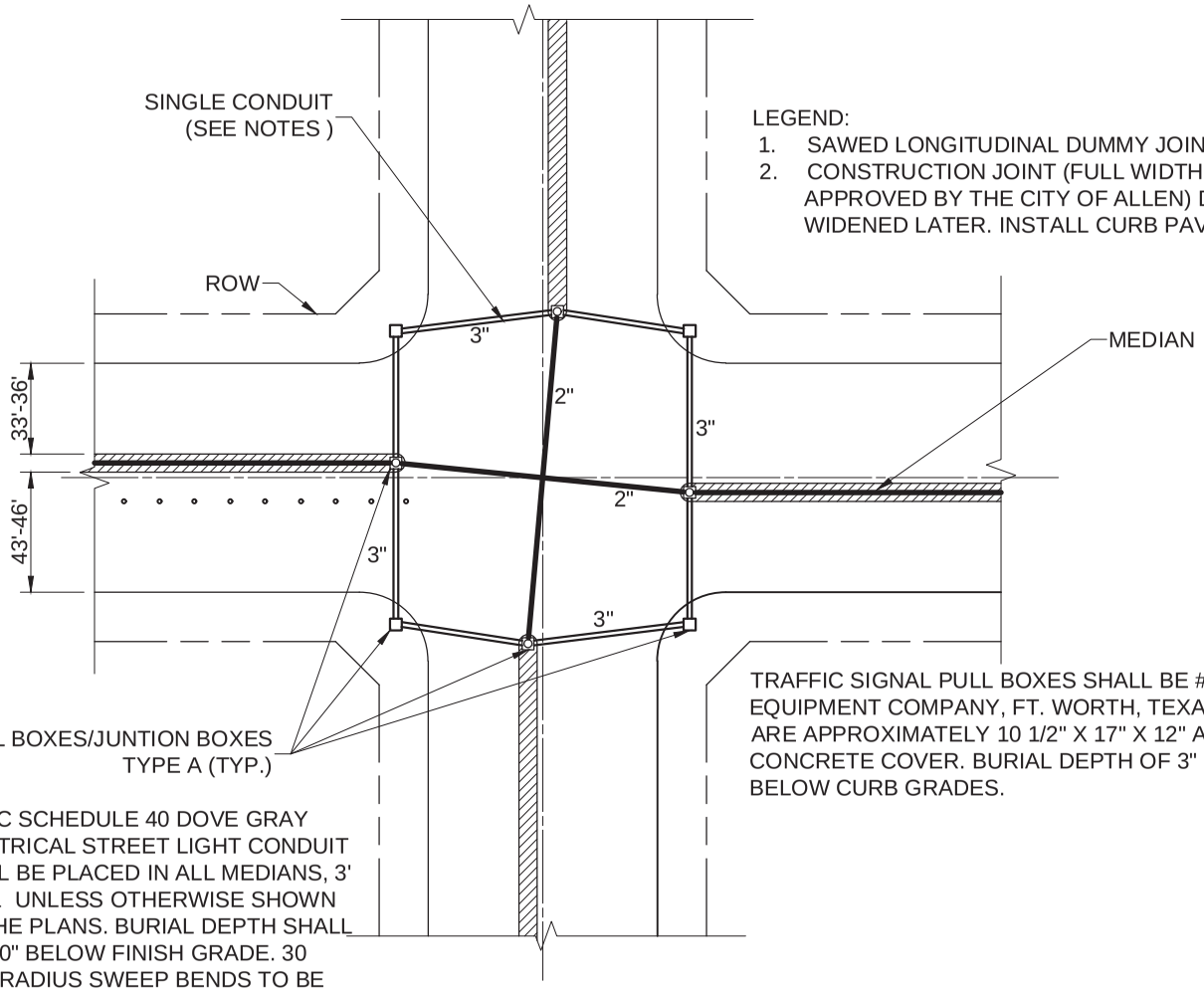

LEGEND:
1. SAWED LONGITUDINAL DUMMY JOINT.
2. CONSTRUCTION JOINT (FULL WIDTH PAVEMENT IS ALLOWED WHERE APPROVED BY THE CITY OF ALLEN) DELETE IF PAVING IS 25 FT WIDTH TO BE WIDENED LATER. INSTALL CURB PAVING IF LESS THAN FULL WIDTH OF 33' - 36'.

TRAFFIC SIGNAL PULL BOXES SHALL BE #36 FROM TRAFFIC SIGNAL EQUIPMENT COMPANY, FT. WORTH, TEXAS OR APPROVED EQUAL. BOXES ARE APPROXIMATELY 10 1/2" X 17" X 12" AND SHALL BE PROVIDED WITH A CONCRETE COVER. BURIAL DEPTH OF 3" CONDUIT SHALL BE 18 INCHES BELOW CURB GRADES.

2" PVC SCHEDULE 40 DOVE GRAY ELECTRICAL STREET LIGHT CONDUIT SHALL BE PLACED IN ALL MEDIANS, 3' OFF ℄ UNLESS OTHERWISE SHOWN ON THE PLANS. BURIAL DEPTH SHALL BE 3'-0" BELOW FINISH GRADE. 30 INCH RADIUS SWEEP BENDS TO BE USED AT ALL HANDHOLE BOXES.

INTERSECTION WIDENING DETAIL

SCALE NTS

NOTES:
1. 3" PVC SCHEDULE 40 DOVE GRAY ELECTRICAL TRAFFIC SIGNAL CONDUIT TO BE INSTALLED CONTINUOUS ACROSS INTERSECTION, EXTENDED TO 2' BEHIND CURBS. SWEEP BENDS TO BE USED AT ALL PULL BOXES.
2. RED MARKER TAPE IS TO BE INSTALLED ON THE ENDS OF THE CONDUIT.
3. THE EXACT LOCATIONS WHERE THE CONDUIT CROSSES UNDER THE PAVING ARE TO BE CHISELED WITH AN "X" AND PAINTED WITH THE RED PAINT, ON THE CURB OR PAVING.
4. A # 9 GALVANIZED WIRE SHALL BE PLACED IN ALL CONDUIT. THIS WIRE SHALL EXTEND A MINIMUM OF 1' FROM THE END OF THE CONDUIT. ITEM 8.10.3

CITY OF ALLEN
DEPARTMENT OF ENGINEERING

INTERSECTION CONDUIT LAYOUT

DATE: SEPT 2001
REV DATE: AUG. 2006
SHEET : SD-P28

STANDARD CONSTRUCTION DETAILS
PAVING

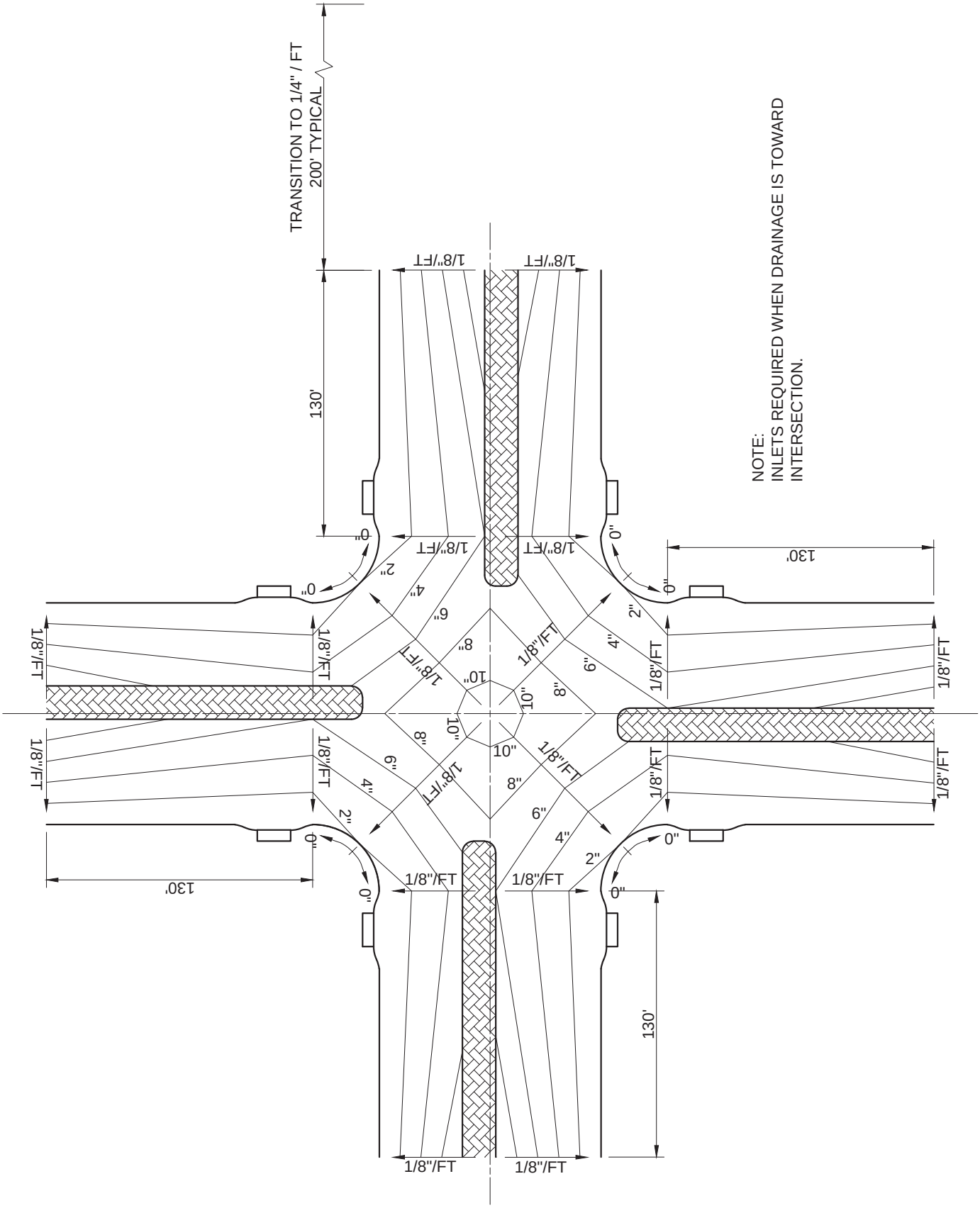

NOTE:
INLETS REQUIRED WHEN DRAINAGE IS TOWARD INTERSECTION.

TYPICAL CONTOURS FOR MAJOR-MAJOR INTERSECTION

SCALE NTS

CITY OF ALLEN
DEPARTMENT OF ENGINEERING

TYPICAL CONTOURS FOR MAJOR-MAJOR INTERSECTION

STANDARD CONSTRUCTION DETAILS
PAVING

DATE:	REV DATE:	SHEET :
SEPT 2001	AUG. 2006	SD-P29

CITY OF ALLEN
DEPARTMENT OF ENGINEERING

CONCRETE SIDEWALK

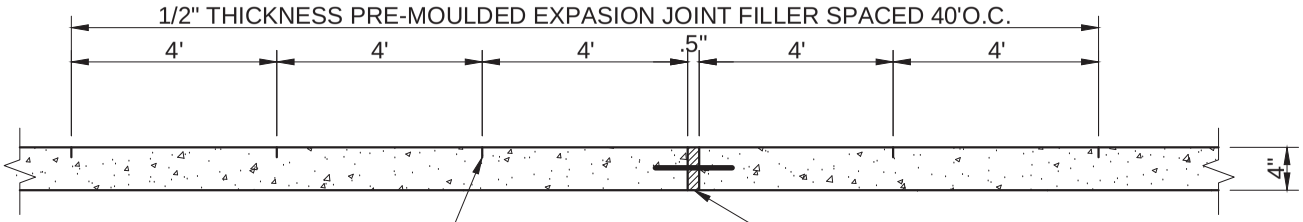

SECTION A
SCALE N.T.S.

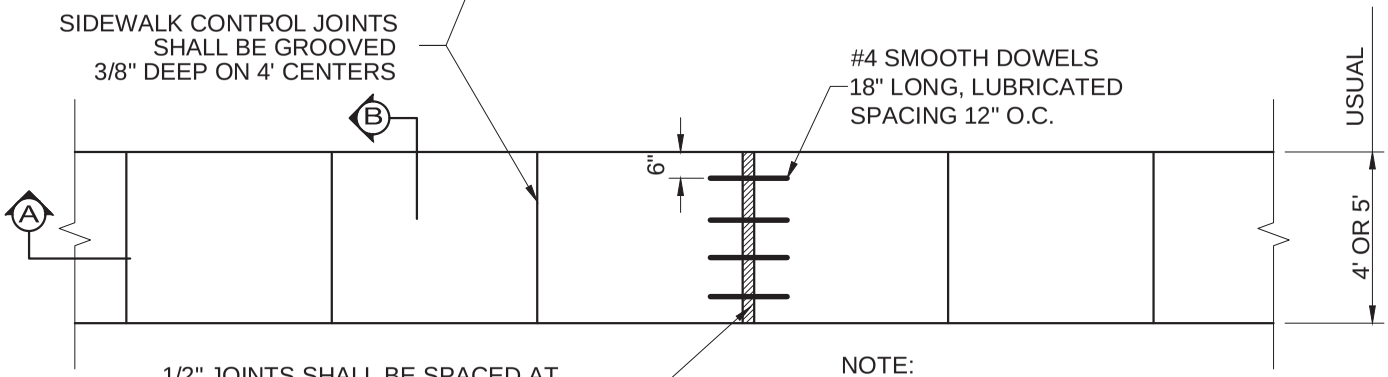

1/2" JOINTS SHALL BE SPACED AT 40' INTERVALS OR AS OTHERWISE SPECIFIED AND SHALL BE FILLED WITH PREMOLDED BITUMINOUS EXPANSION JOINT FILLER.

NOTE:
WHEN CONCRETE WALK IS ADJACENT TO CURB, DEPTH OF EXPANSION JOINT MATERIAL SHALL BE SUFFICIENT TO PREVENT CONCRETE TO CONCRETE CONTACT BETWEEN WALK AND CURB. WALK SHALL BE 5' WHEN NEXT TO CURB.

PLAN
SCALE N.T.S.

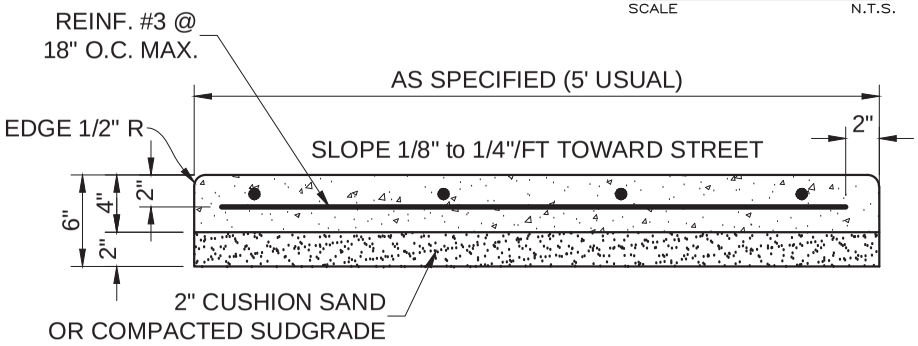

SECTION B
SCALE N.T.S.

	CONSTRUCTED MAX.
CROSS SLOPE	2%
RUNNING SLOPE	5% WHEN ADJACENT STREET ≤ 5%

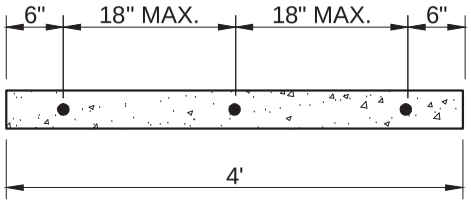

REBARS SPACING
SCALE N.T.S.

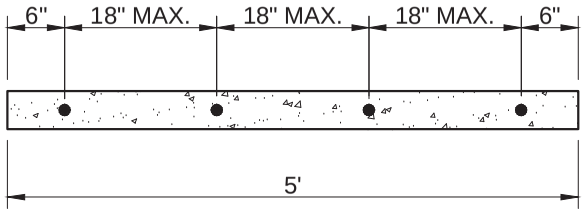

REBARS SPACING
SCALE N.T.S.

STANDARD CONSTRUCTION DETAILS
PAVING

DATE: SEPT 2001

REV DATE: OCT 2016

SHEET : SD-P30

THOROUGHFARE

70'+ R.O.W.

5' SIDEWALK SHALL BE LOCATED
1' INSIDE R.O.W. OF
THOROUGHFARES.

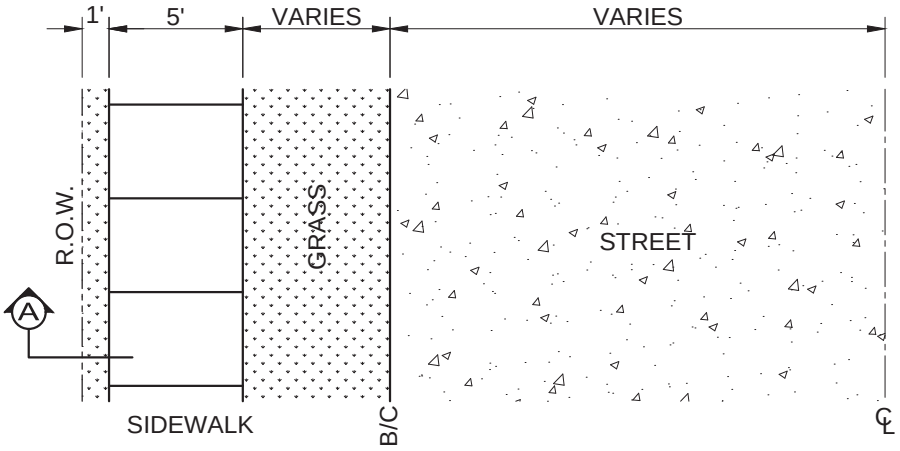

RESIDENTIAL

50' R.O.W.

4' SIDEWALK SHALL BE LOCATED
1' INSIDE R.O.W. OF
RESIDENTIAL STREETS.

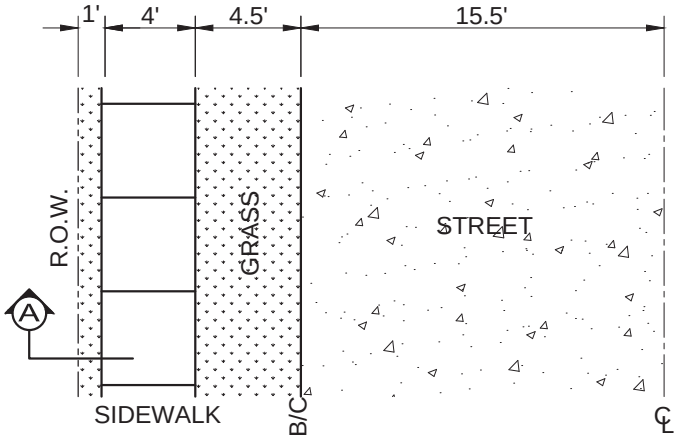

COLLECTOR

60' R.O.W.

4' SIDEWALK SHALL BE LOCATED
1' INSIDE R.O.W. OF
COLLECTOR STREETS.

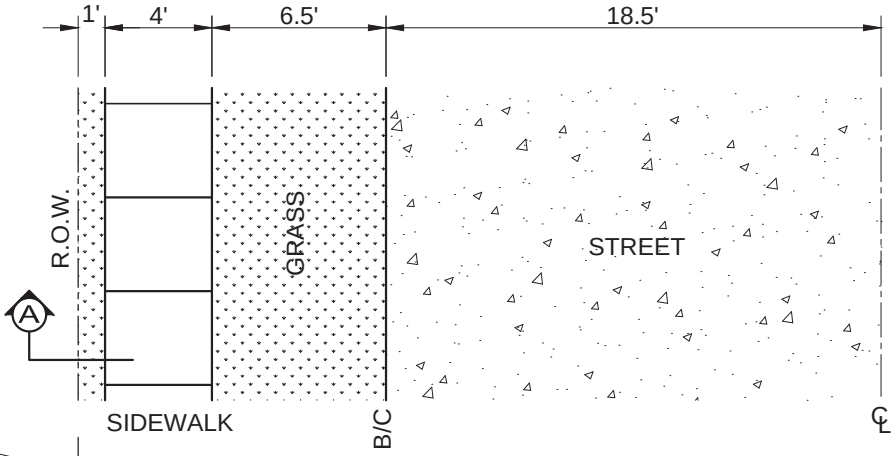

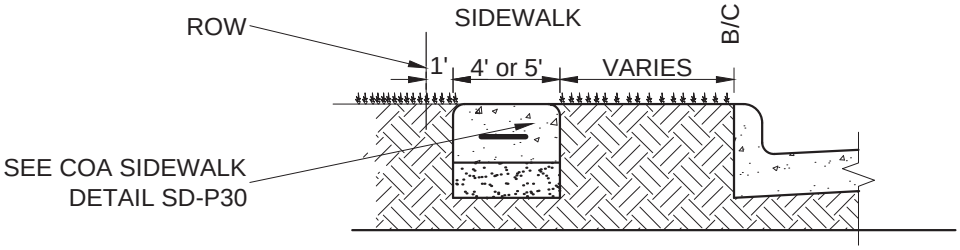

SECTION A

SCALE N.T.S.

CITY OF ALLEN
DEPARTMENT OF ENGINEERING

CONCRETE SIDEWALK
(CONTINUED)

STANDARD CONSTRUCTION DETAILS
PAVING

DATE:	REV DATE:	SHEET :
JUNE 1998	OCT 2016	SD-P31

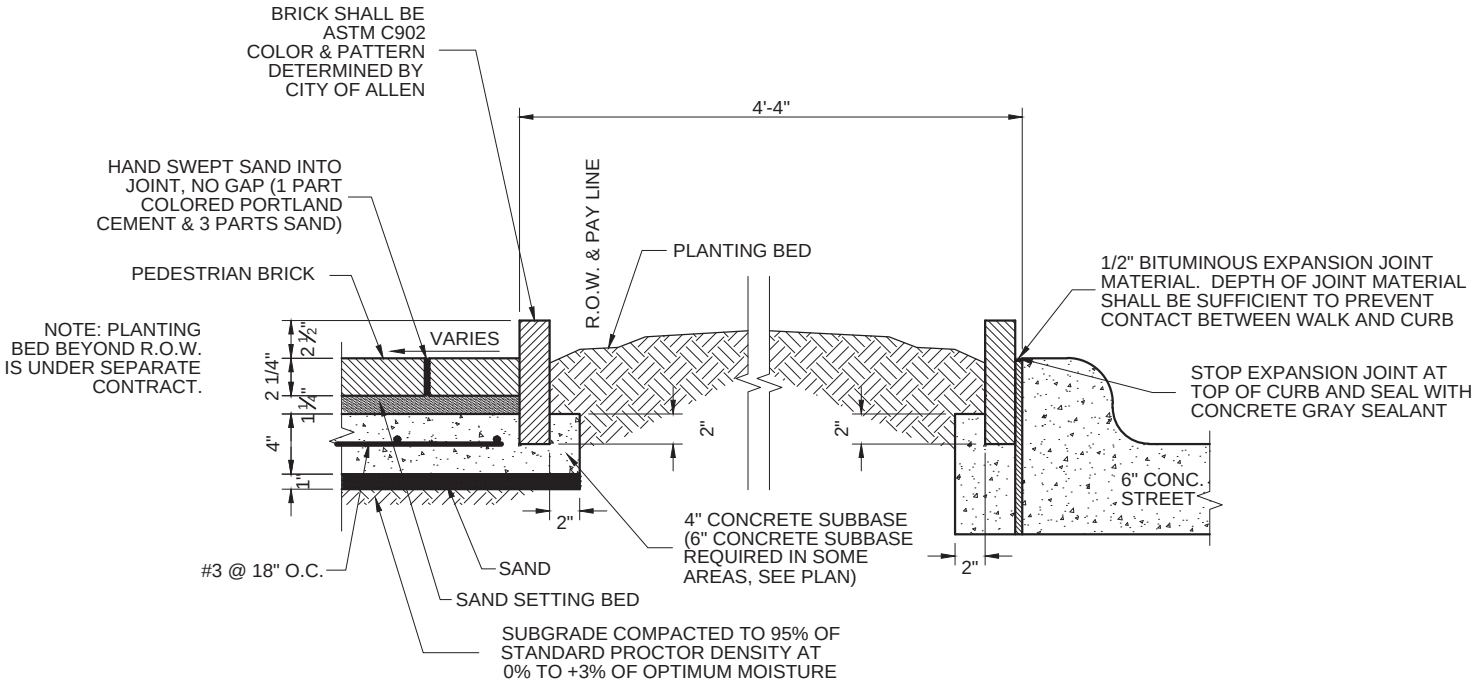

TYPICAL BRICK SIDEWALK
AND SUPPORT SLAB

SECTION B

SCALE NTS

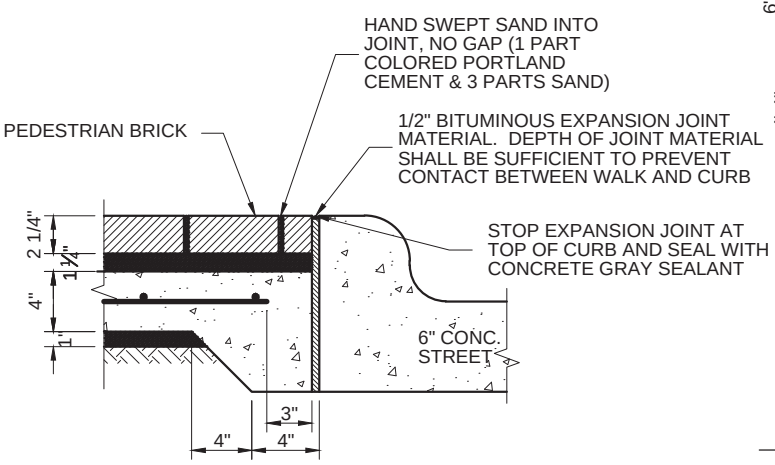

SECTION A

SCALE NTS

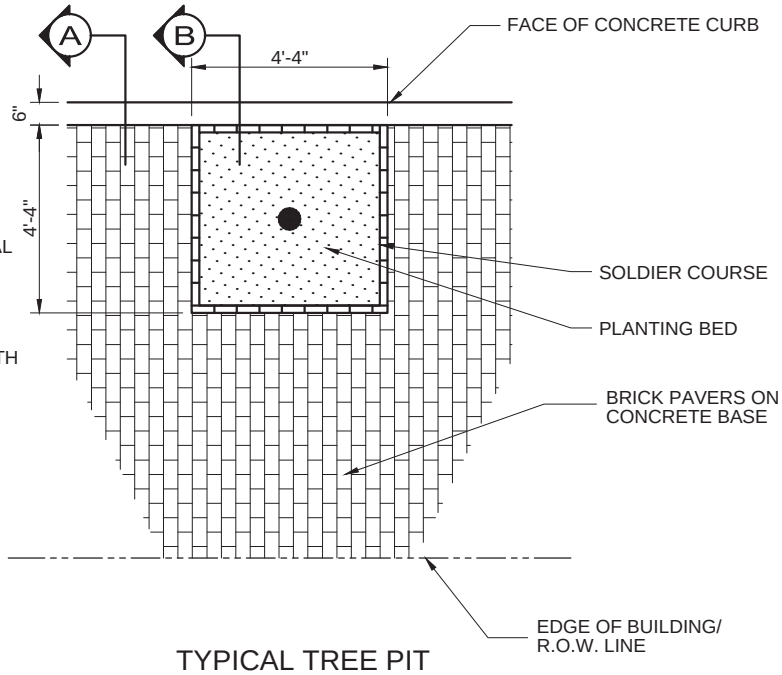

TYPICAL TREE PIT
(IF REQ'D)

PLAN

SCALE NTS

CITY OF ALLEN
DEPARTMENT OF ENGINEERING

SIDEWALK
BRICK PAVERS

STANDARD CONSTRUCTION DETAILS
PAVING

DATE:	REV DATE:	SHEET :
MARCH 2001	AUG. 2006	SD-P32

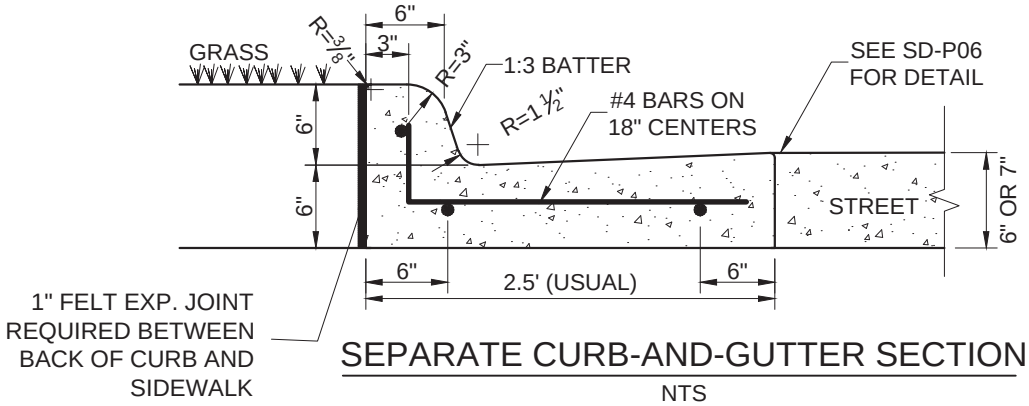

SEPARATE CURB-AND-GUTTER SECTION

NTS

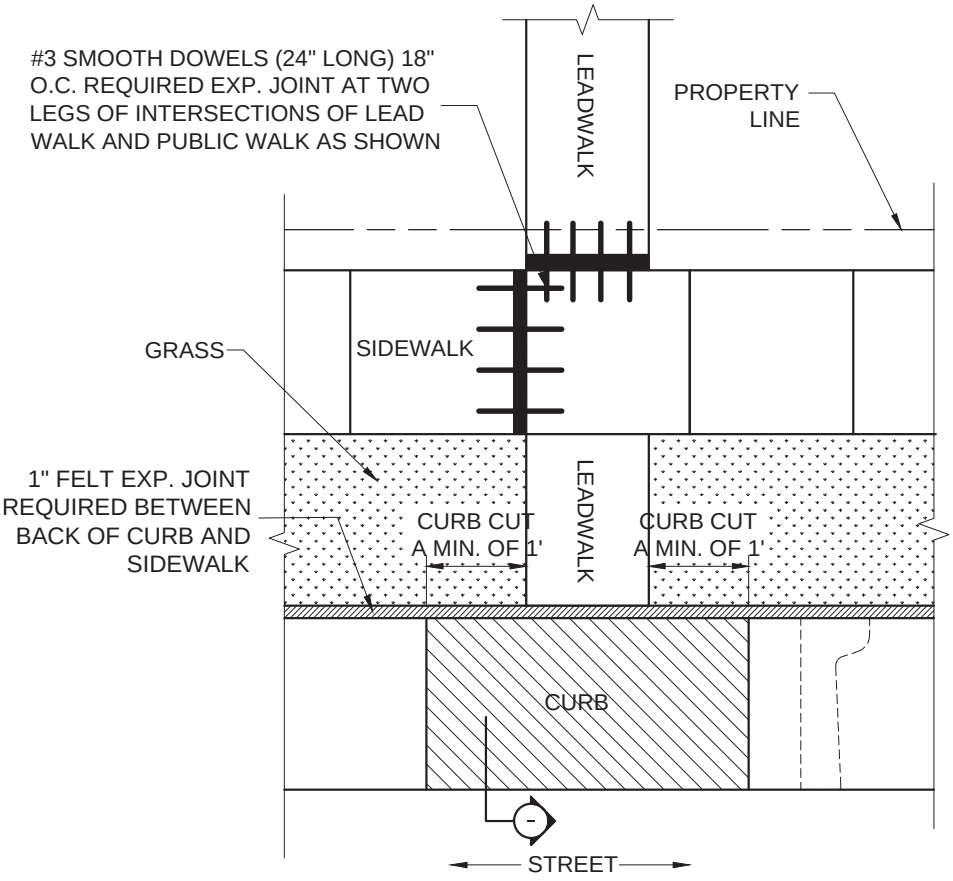

NOTES

1. ALL SIDEWALKS AND DRIVEWAY REINFORCEMENT SHALL BE #3 STEEL 18" O.C.E.W. TIED TO #3 SMOOTH DOWELS (SEE SD-P33 AND SD-P36) AND SET UPON CHAIRS.
2. 2-INCH CUSHION SAND REQUIRED ON SUBGRADE COMPACTED WITHIN 95% STANDARD PROCTOR DENSITY.
3. POURS SHALL REQUIRE A PRE-POUR INSPECTION FOR FORMWORK, REINFORCEMENT AND GEOPMETRY. VISUAL INSPECTIONS MAY BE MADE AFTER THE POUR TO ADDRESS TOOLED JOINTS, FINISH, SUBGRADE INTEGRITY,
4. ENSURE THAT FLATWORK DOES NOT OBSCURE ABOVE-GROUND APPURTENANCES (I.E. VALVES, MH LIDS)
5. EXPOSED AGGREGATE CONCRETE IS NOT ACCEPTABLE FOR SIDEWALK WITHIN PUBLIC RIGHT-OF-WAY.
6. SIDEWALKS SHALL BE 48" WIDE (MIN.) WITH 42" (MIN.) UNOBSTRUCTED. SIDEWALKS ALONG ARTERIAL (THOROUGHFARE) ROADWAYS SHALL BE 5' MIN.
7. FOR CURB DETAIL SEE SHEET SD-P11

CITY OF ALLEN DEPARTMENT OF ENGINEERING	CURB AND LEAD WALK REPAIR	STANDARD CONSTRUCTION DETAILS PAVING		
		DATE: AUG 2005	REV DATE: OCT. 2016	SHEET : SD-P33

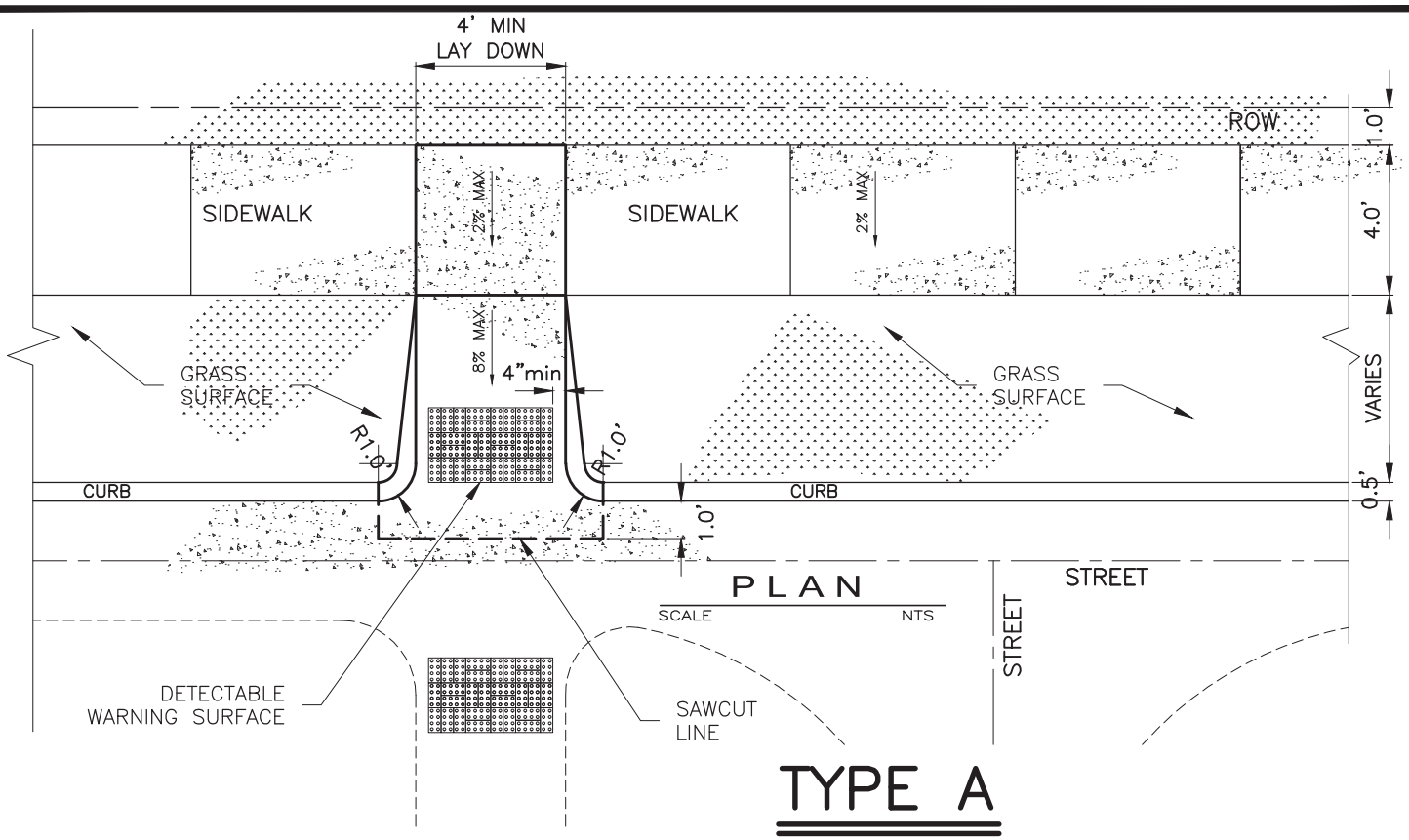

TYPE A

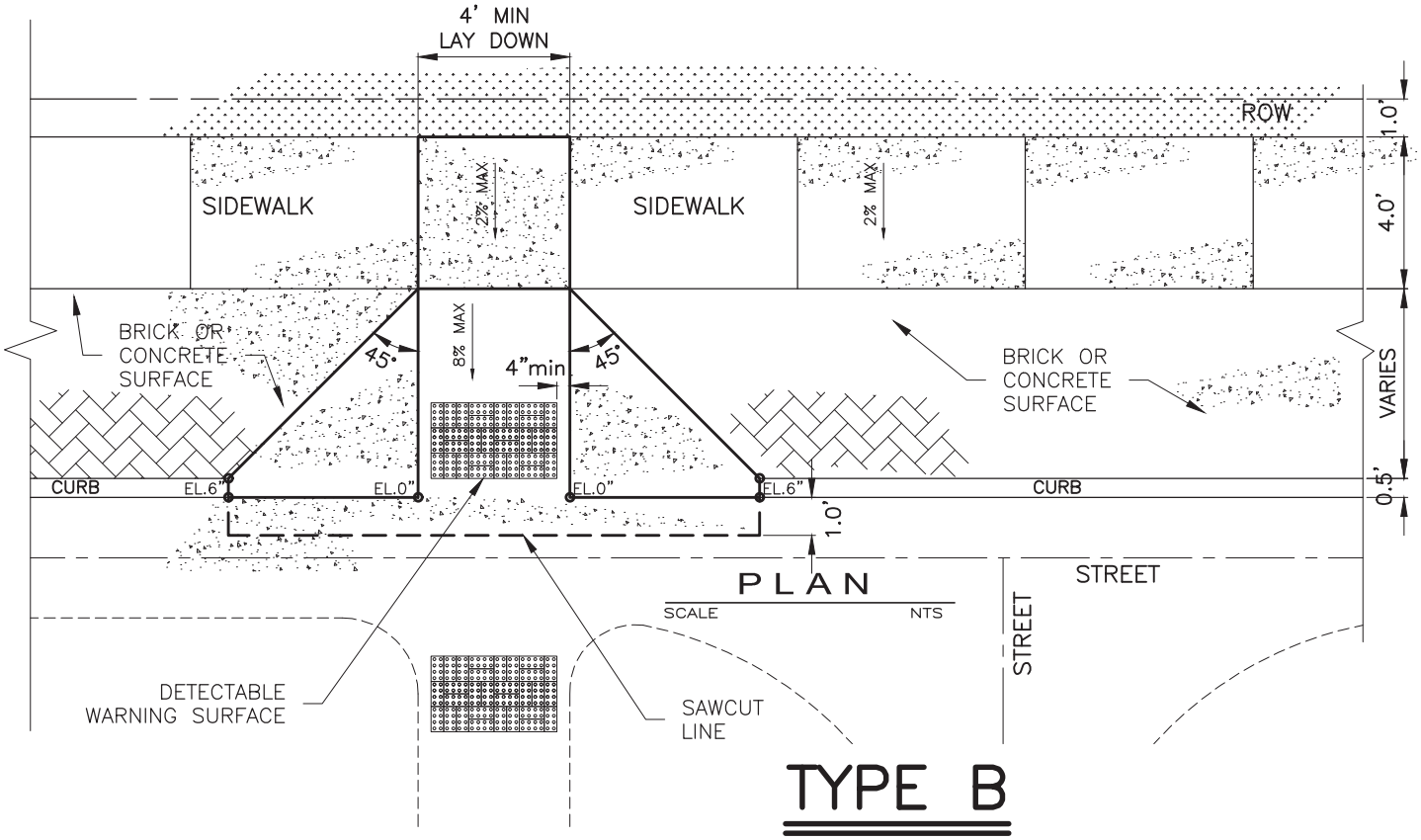

TYPE B

CITY OF ALLEN DEPARTMENT OF ENGINEERING	BARRIER FREE RAMPS TYPE 'A' & 'B'	STANDARD CONSTRUCTION DETAILS PAVING		
		DATE: MAR 2004	REV DATE: DEC 2016	SHEET : SD-P34

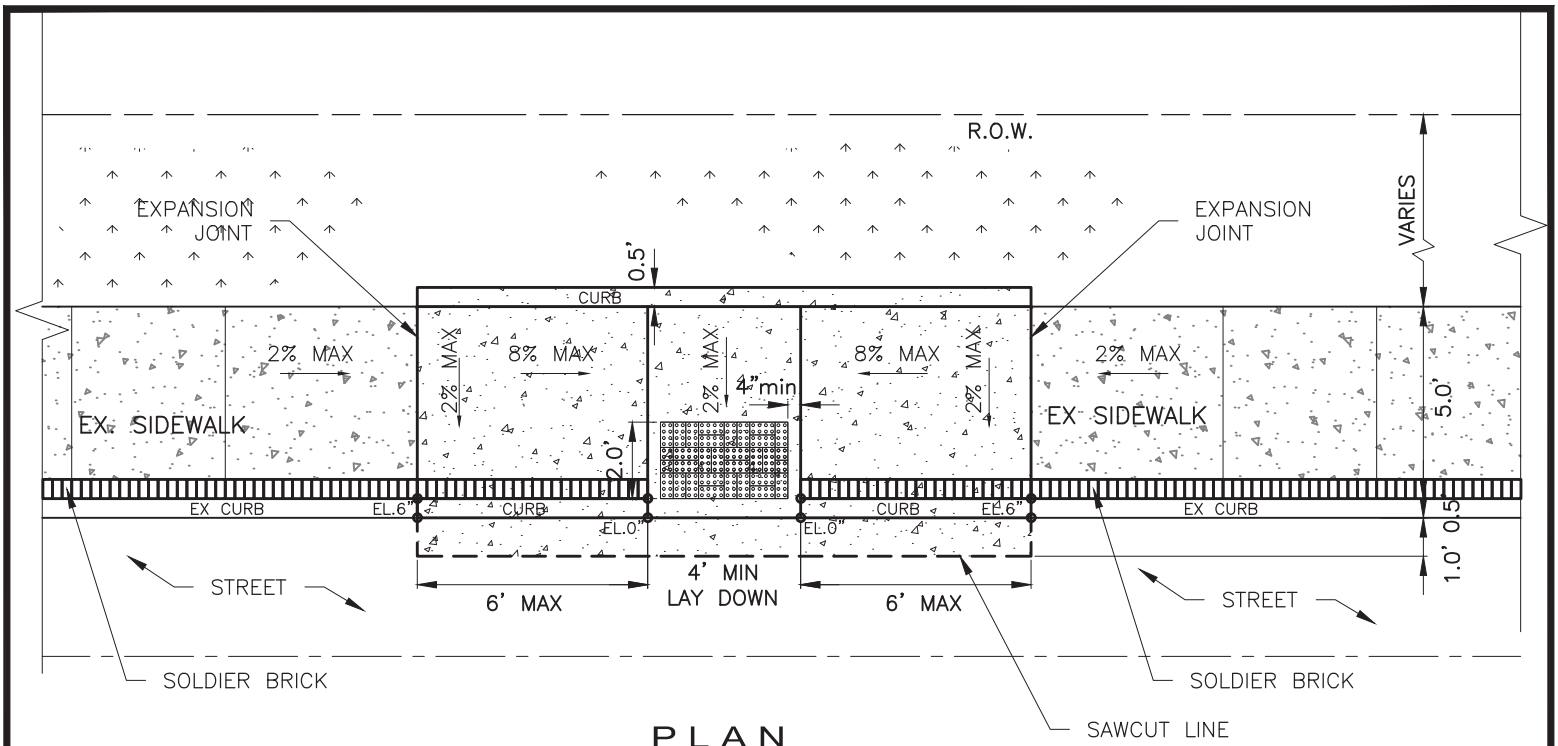

PLAN

SCALE NTS

TYPE C

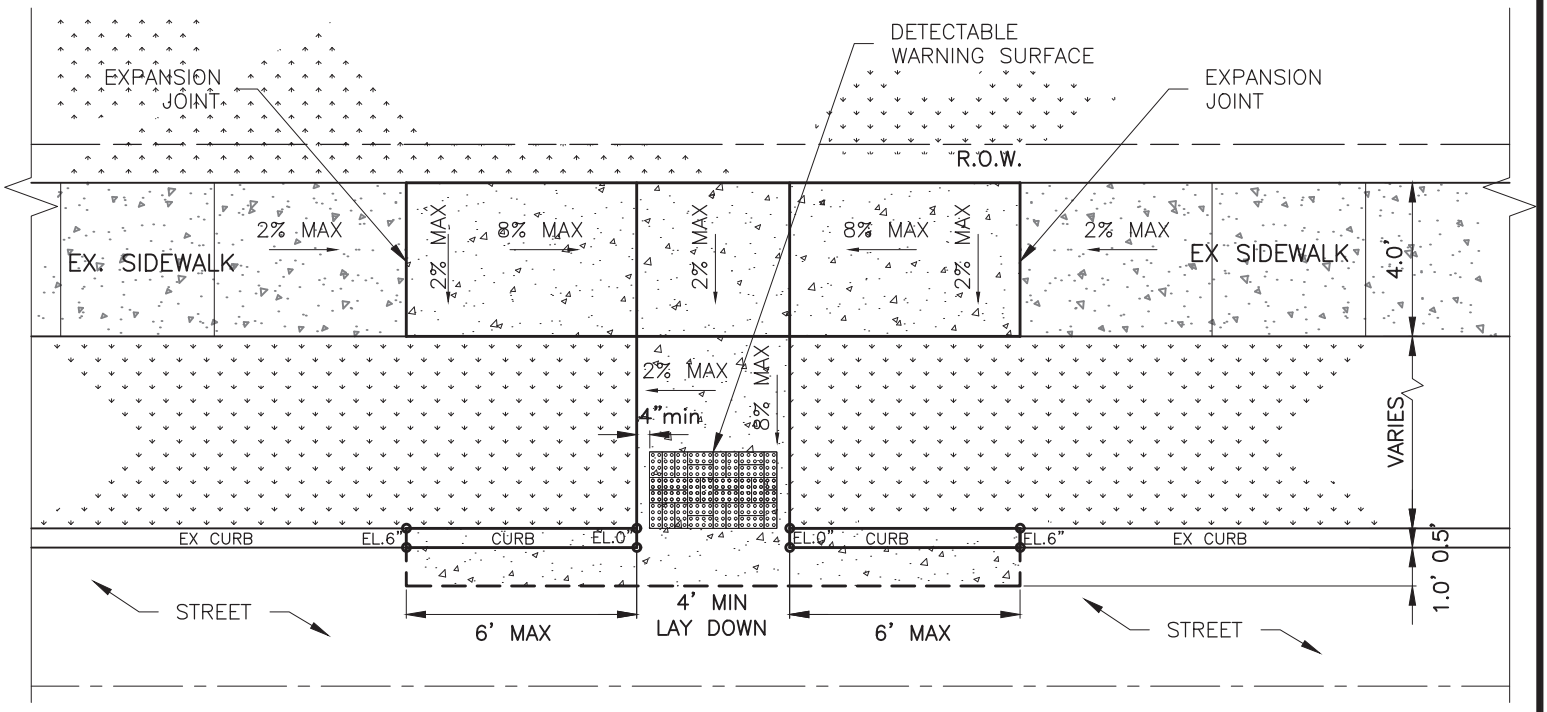

PLAN

SCALE NTS

TYPE D

CITY OF ALLEN DEPARTMENT OF ENGINEERING	BARRIER FREE RAMPS TYPE 'C' & 'D'	STANDARD CONSTRUCTION DETAILS PAVING		
		DATE: MAR 2004	REV DATE: DEC 2016	SHEET : SD-P35

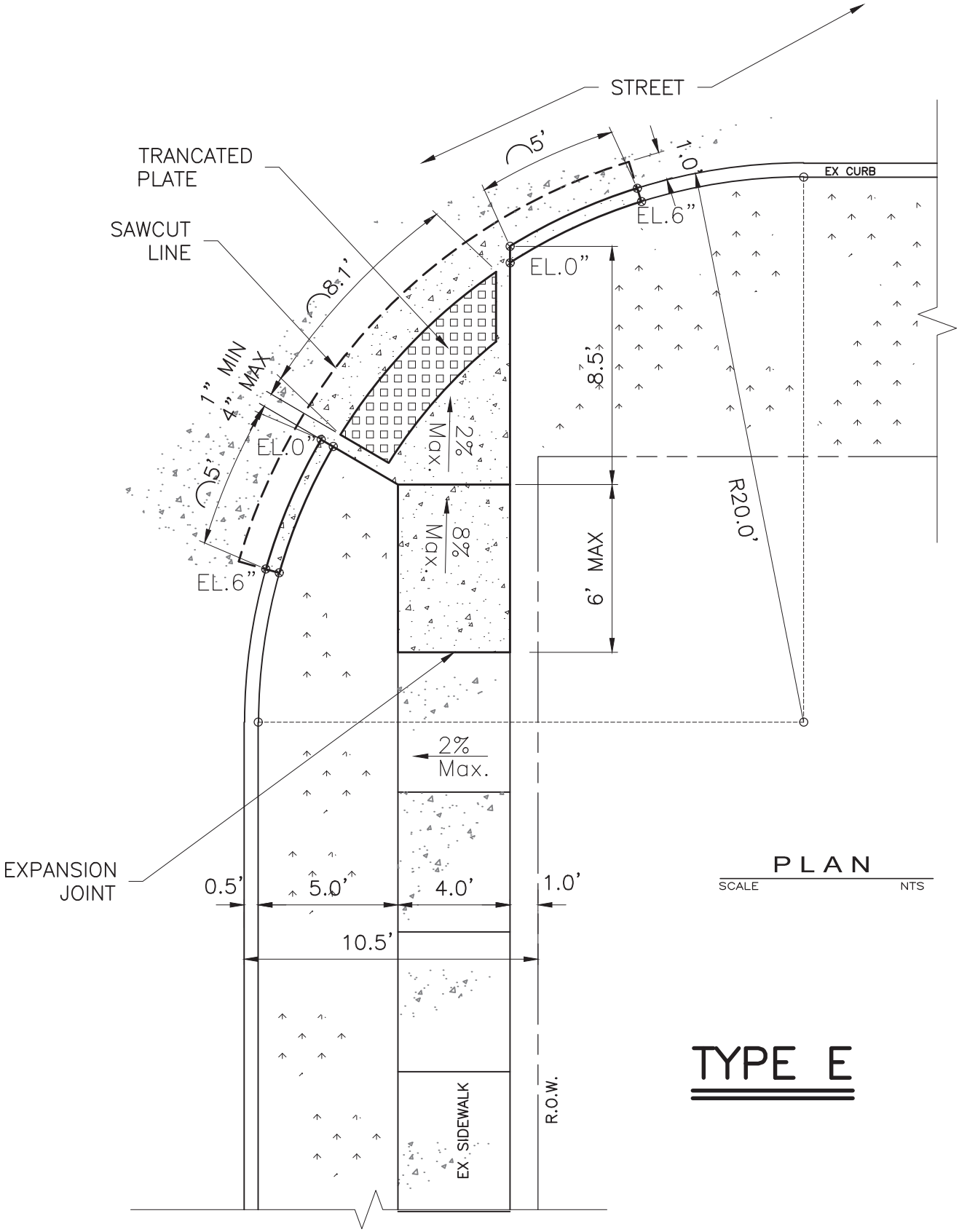

CITY OF ALLEN
DEPARTMENT OF ENGINEERING

BARRIER FREE RAMPS
TYPE 'E'
(RESIDENTIAL)

STANDARD CONSTRUCTION DETAILS
PAVING

DATE:	REV DATE:	SHEET :
DEC. 2016		SD-P36

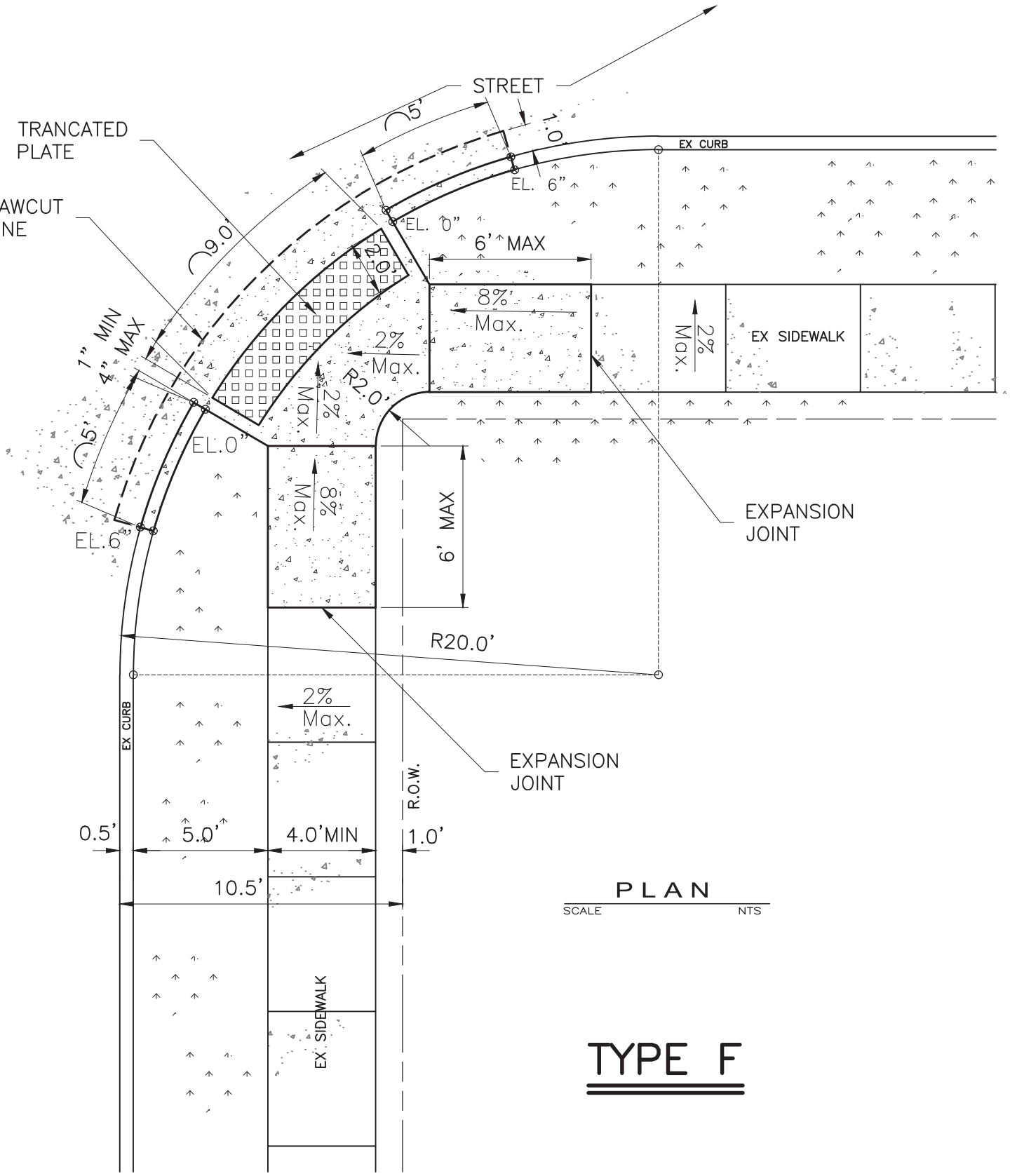

PLAN

SCALE NTS

TYPE F

CITY OF ALLEN
DEPARTMENT OF ENGINEERING

BARRIER FREE RAMPS
TYPE 'E'
(RESIDENTIAL)

STANDARD CONSTRUCTION DETAILS
PAVING

DATE:	REV DATE:	SHEET :
DEC. 2016		SD-P37

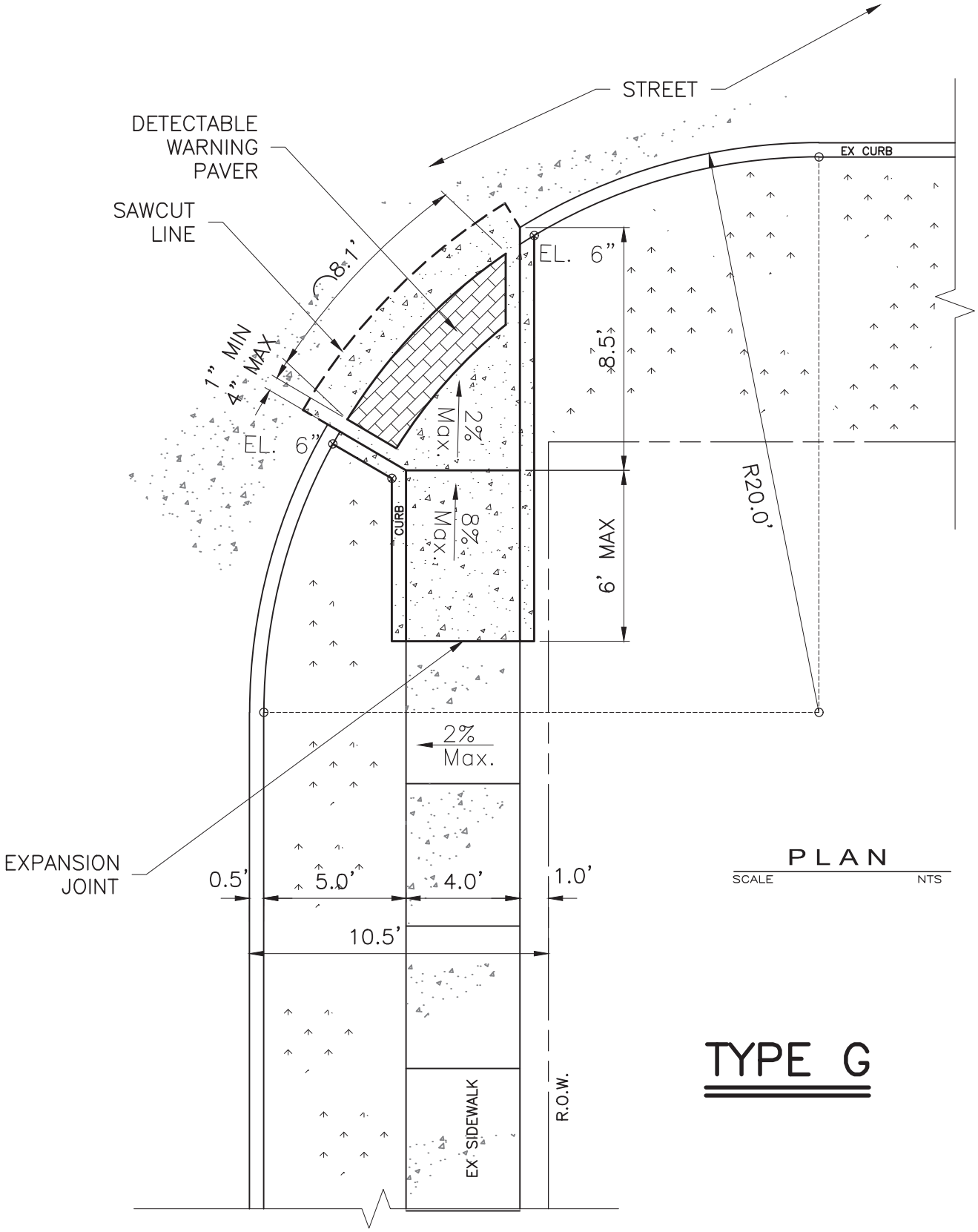

PLAN

SCALE NTS

TYPE G

CITY OF ALLEN
DEPARTMENT OF ENGINEERING

BARRIER FREE RAMPS
TYPE 'G'
(COMMERCIAL)

STANDARD CONSTRUCTION DETAILS
PAVING

DATE:	REV DATE:	SHEET :
DEC. 2016		SD-P38

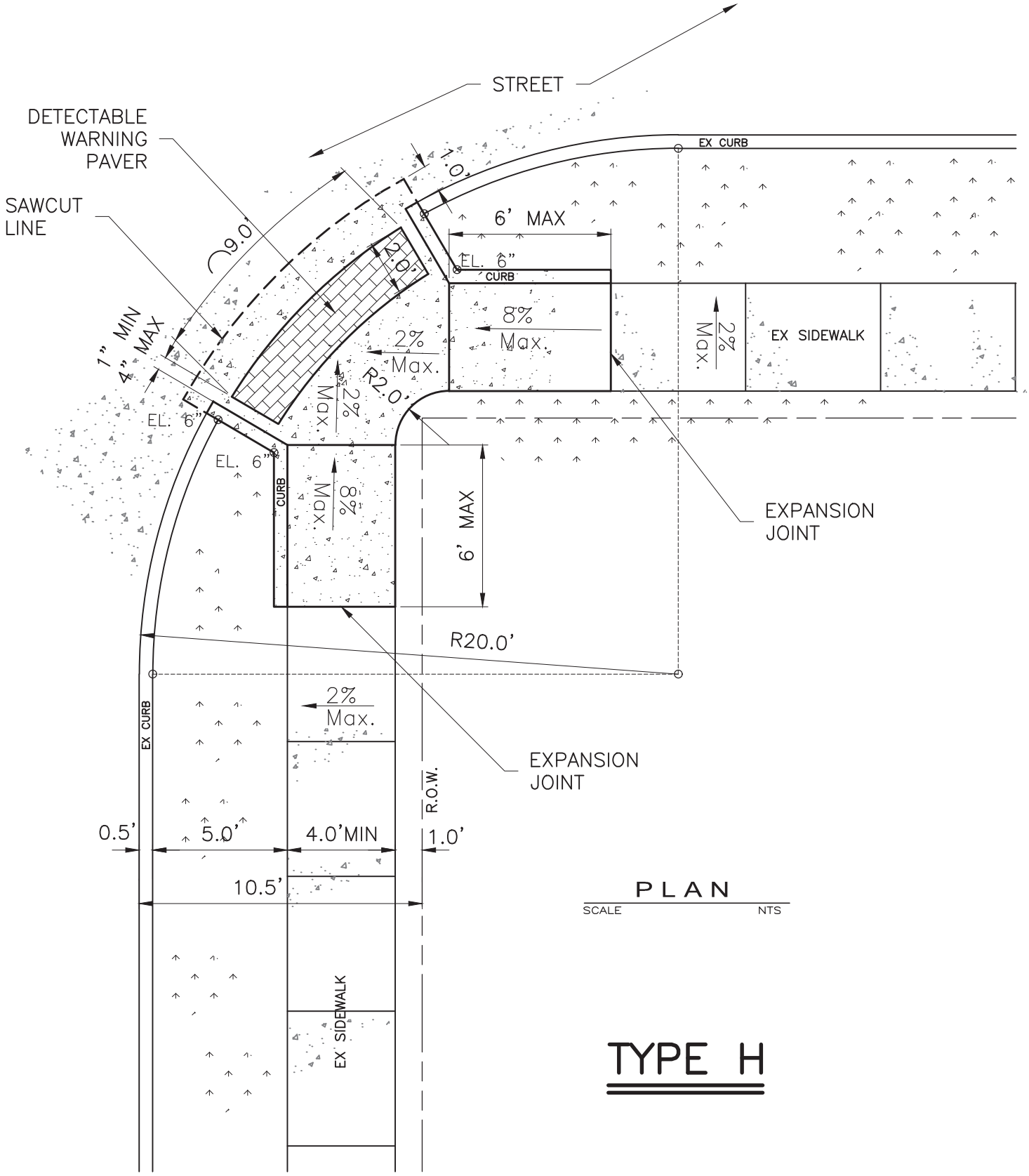

PLAN

SCALE NTS

TYPE H

CITY OF ALLEN DEPARTMENT OF ENGINEERING	BARRIER FREE RAMPS TYPE 'H' (COMMERCIAL)	STANDARD CONSTRUCTION DETAILS PAVING		
		DATE: DEC. 2016	REV DATE:	SHEET : SD-P39

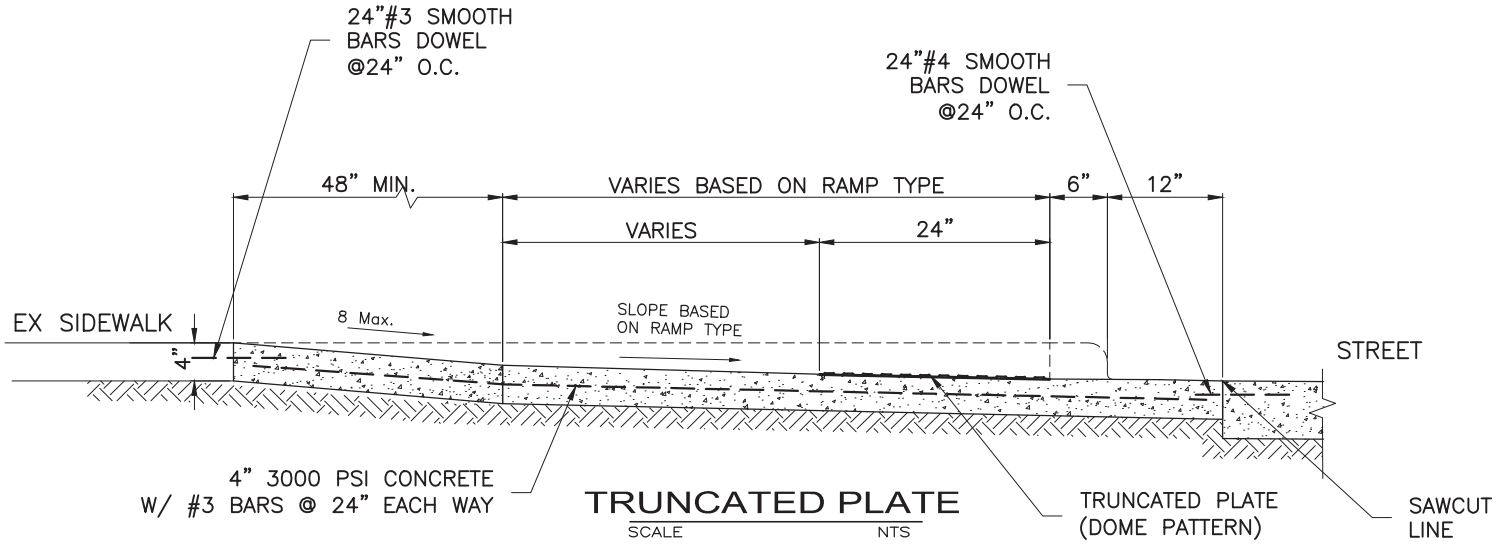

TRUNCATED PLATE

SCALE NTS

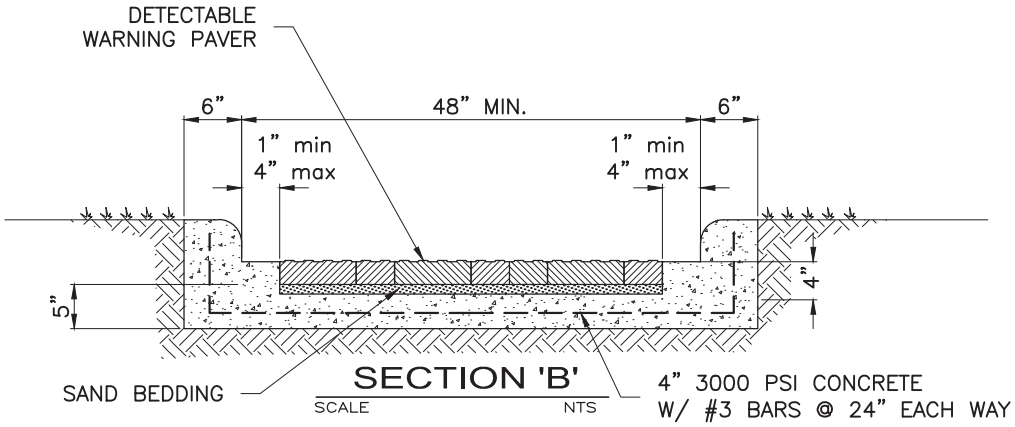

SECTION 'B'

SCALE NTS

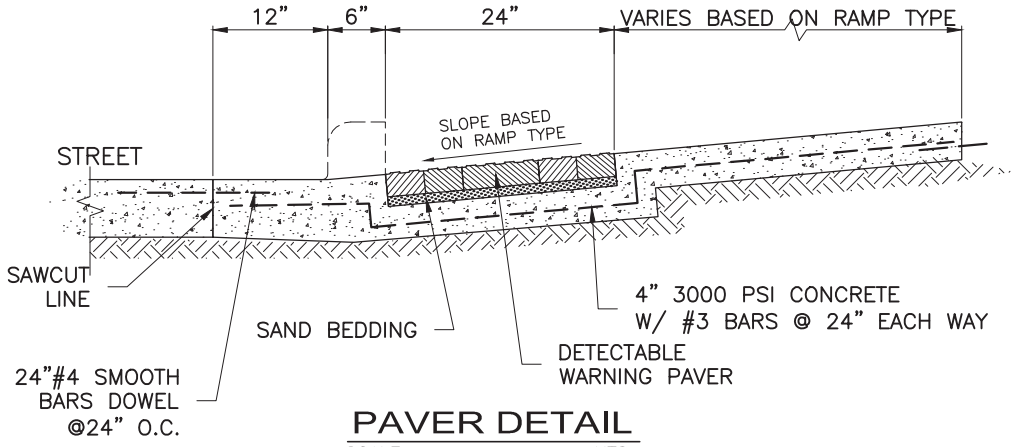

PAVER DETAIL

SCALE NTS

GENERAL NOTES:

1. THE TRUNCATED DOME PATTERN BRICK PAVER OR TRUNCATED PLATE SHALL BE 24 INCHES IN DEPTH, EXTENDING THE FULL WIDTH OF THE RAMP OPENING.
2. THE TRUNCATED DOME PATTERN SHALL BEGIN 6 TO 8 INCHES BEHIND PROJECTED BACK-OF-CURB LINE AND SHALL BE AN INTEGRAL PART OF THE WALKING SURFACE.
3. DOMES SHALL BE ARRANGED ON A SQUARE GRID, ALIGNED PERPENDICULAR TO THE BACK-OF-CURB.
4. THE CONTRACTOR SHALL OBTAIN APPROVAL FROM CITY ENGINEER FOR THE USE OF BRICK PAVER OR TRUNCATED PLATE. THE CONTRACTOR SHALL USE SPECIFIED ITEM FOR THE ENTIRE PROJECT.
5. BARRIER FREE RAMPS SHALL BE CONSTRUCTED IN ACCORDANCE WITH CURRENT ADA ACCESSIBILITY GUIDELINES.
6. MINIMUM DIMENSIONS SHOWN FOR TRUNCATED PATTERN AREA (i.e.24"X48") SHALL BE CONSTRUCTED WITHOUT CUTTING ANY OF THE PATTERNED PAVERS. ACTUAL DIMENSIONS MAY BE LARGER THAN THOSE SHOWN.
7. DO NOT DOWEL INTO THE BACK OF CURB.
8. CONTRACTOR IS RESPONSIBLE FOR INSTALLING BRICK PAVER OR TRUNCATED PLATE FREE OF DIPS, HUMP AND AIR VOIDS. IF SUCH DEFECT IS FOUND IT SHALL BE REPLACED OR REPAIRED AT CONTRACTOR EXPENSE.
9. ALL DETECTABLE SURFACE SHALL BE RED UNLESS OTHERWISE STATED.
10. TRUNCATED PLATES SHALL BE REMOVABLE/REPLACEABLE.

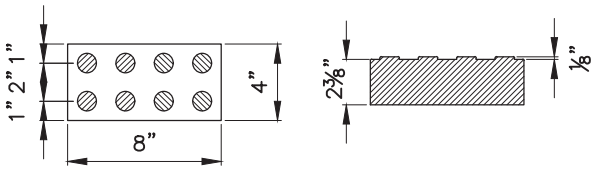

DETECTABLE WARNING PAVER

CITY OF ALLEN DEPARTMENT OF ENGINEERING	BARRIER FREE GENERAL NOTE & DETECTABLE SURFACE	STANDARD CONSTRUCTION DETAILS PAVING	
		DATE: MAR 2004	REV DATE: DEC 2016	SHEET : SD-P40

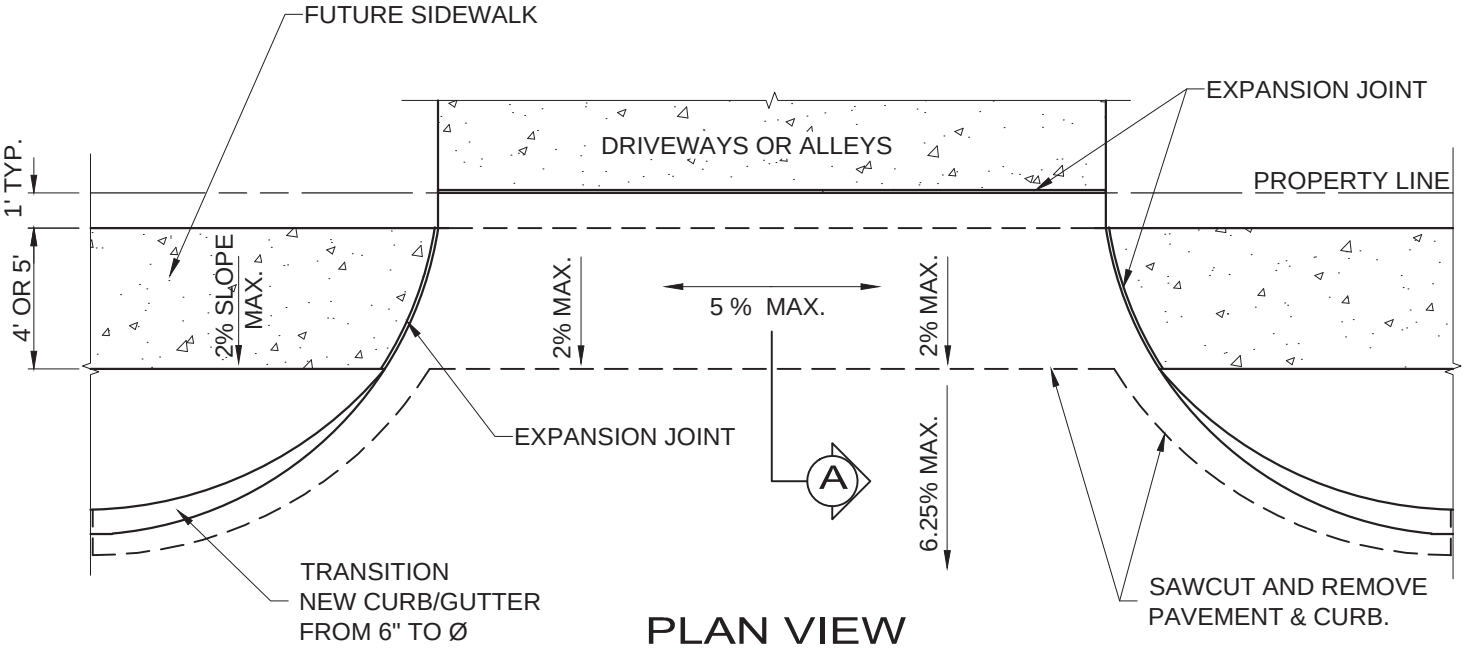

PLAN VIEW

SCALE NTS

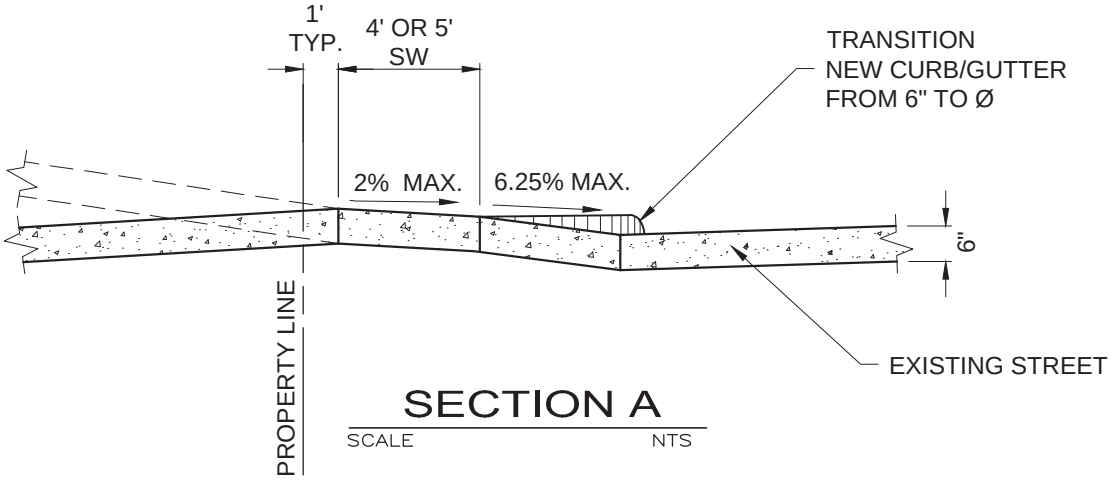

SECTION A

SCALE NTS

CITY OF ALLEN DEPARTMENT OF ENGINEERING	BARRIER FREE RAMPS AT DRIVEWAYS & ALLEYS	STANDARD CONSTRUCTION DETAILS PAVING	
		DATE: SEPT 1991	REV DATE: JUL. 2010	SHEET : SD-P41

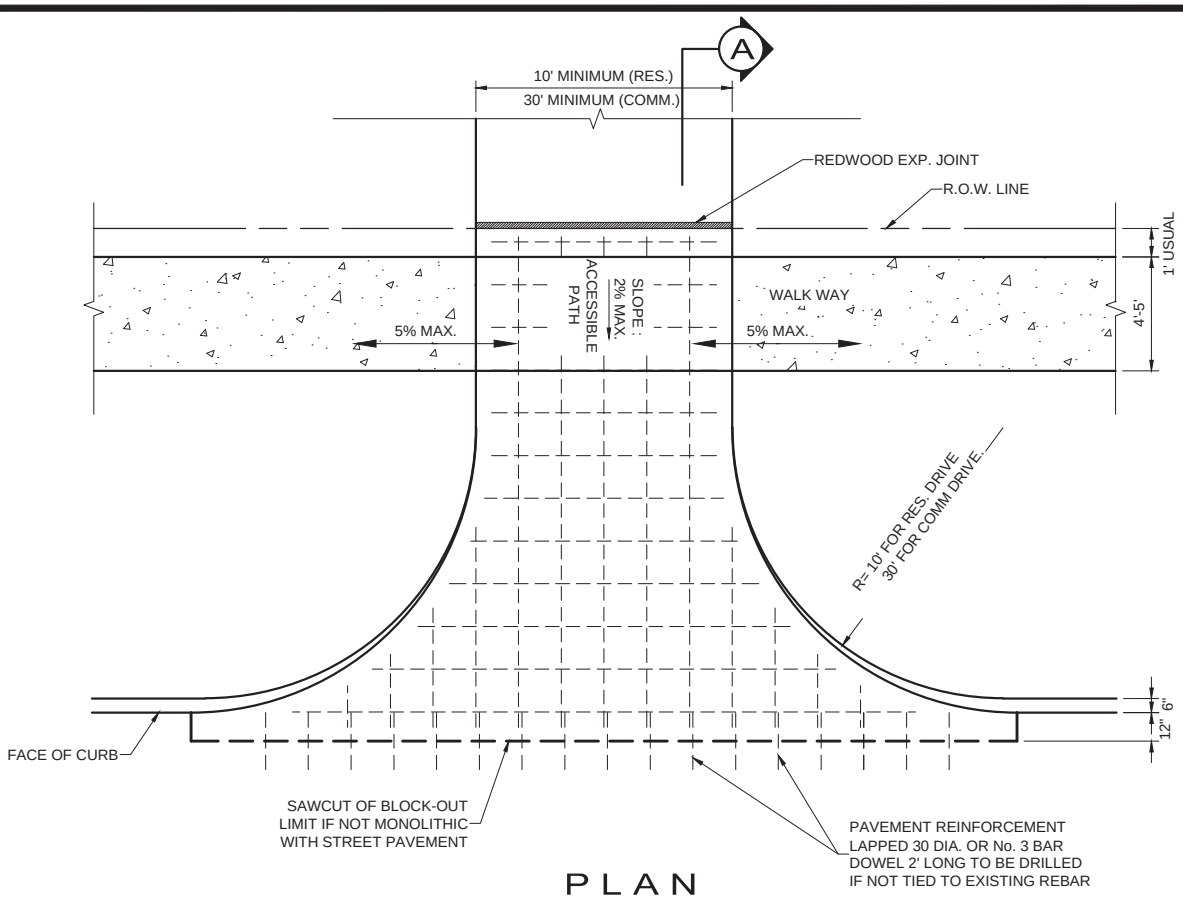

PLAN

SCALE N.T.S.

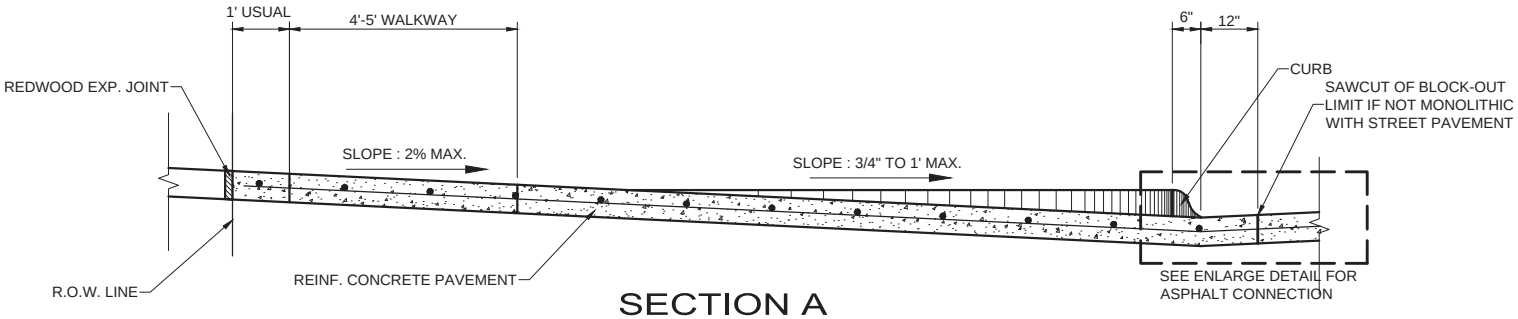

SECTION A

CONCRETE CONNECTION N.T.S.

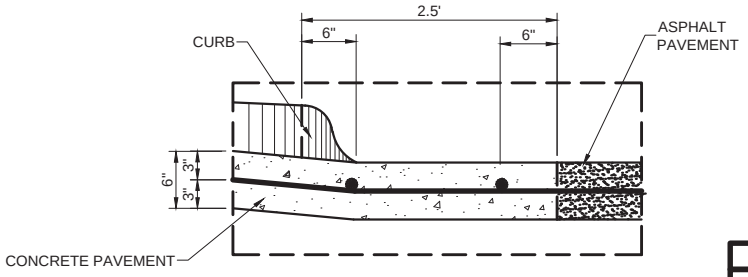

ENLARGE DETAIL

ASPHALT CONNECTION N.T.S.

	CONSTRUCTED MAX.
CROSS SLOPE	2%
RUNNING SLOPE	5% WHEN ADJACENT STREET ≤ 5%

CITY OF ALLEN
DEPARTMENT OF ENGINEERING

DRIVEWAY RETURN DETAILS
(RESIDENTIAL AND COMMERCIAL)

STANDARD CONSTRUCTION DETAILS
PAVING

DATE:	REV DATE:	SHEET :
SEPT 1991	MAY 2013	SD-P42

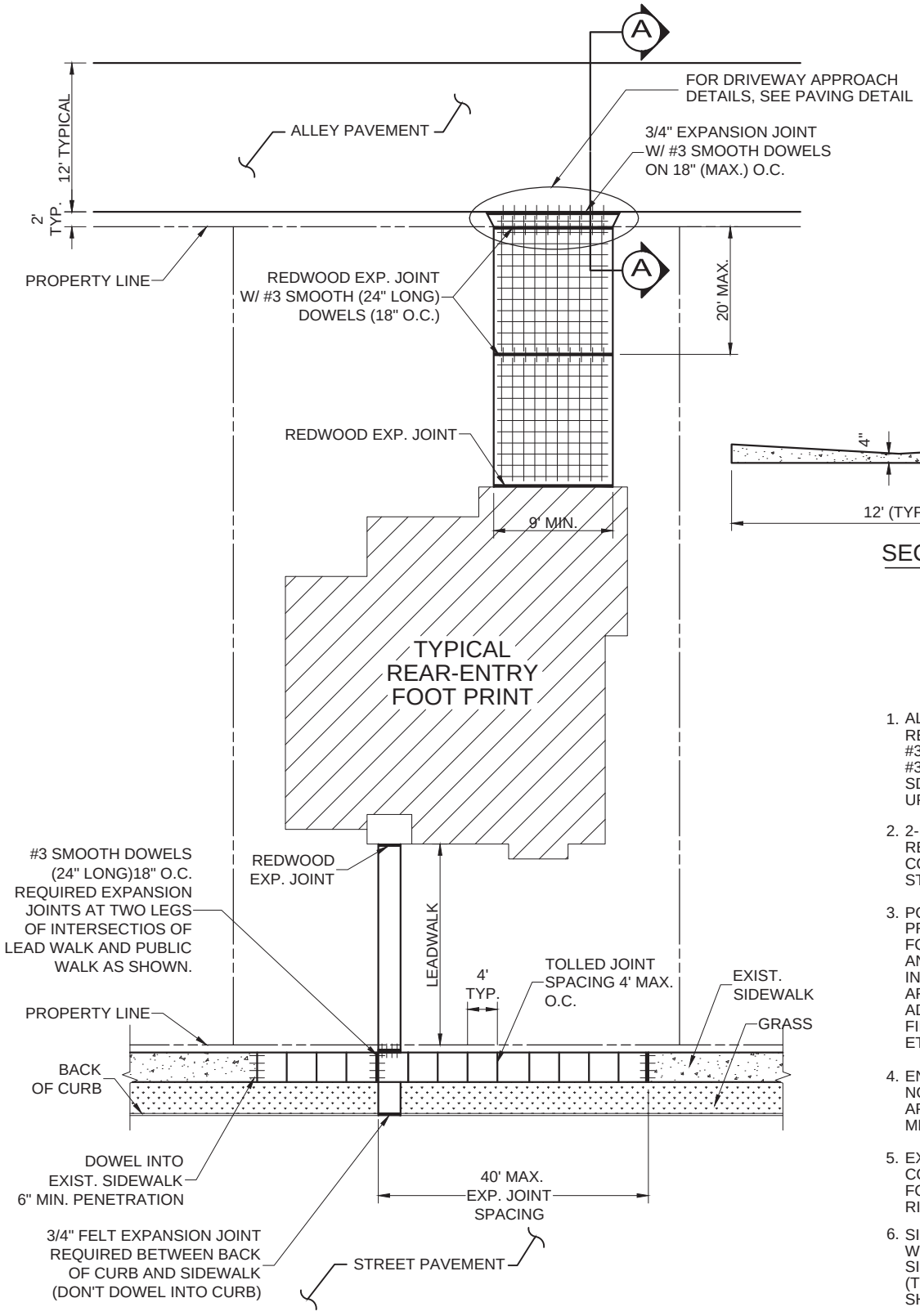

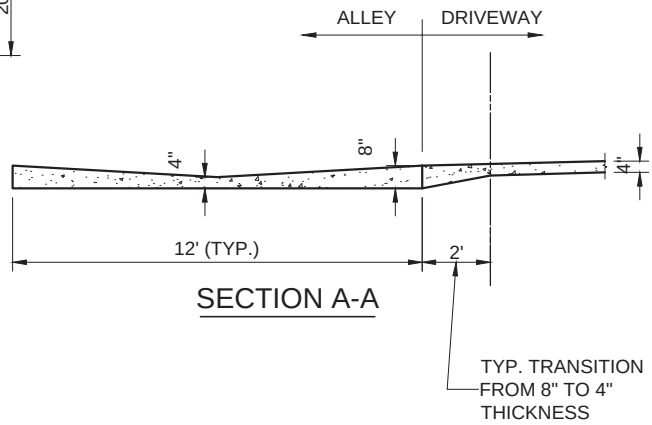

SECTION A-A

NOTES

1. ALL SIDEWALKS AND DRIVEWAY REINFORCEMENT SHALL BE #3 STEEL 18" O.C.E.W. WITH #3 SMOOTH DOWELS (SEE SD-P33 AND SD-P36) AND SET UPON CHAIRS.
2. 2-INCH CUSHION SAND REQUIRED ON SUBGRADE COMPACTED WITHIN 95% STANDARD PROCTOR DENSITY.
3. POURS SHALL REQUIRE A PRE-POUR INSPECTION FOR FORMWORK, REINFORCEMENT AND GEOPMETRY. VISUAL INSPECTIONS MAY BE MADE AFTER THE POUR TO ADDRESS TOOLED JOINTS, FINISH, SUBGRADE INTEGRITY, ETC.
4. ENSURE THAT FLATWORK DOES NOT OBSCURE ABOVE-GROUND APPURTENANCES (I.E. VALVES, MH LIDS)
5. EXPOSED AGGREGATE CONCRETE IS NOT ACCEPTABLE FOR SIDEWALK WITHIN PUBLIC RIGHT-OF-WAY.
6. SIDEWALKS SHALL BE 48" WIDE (MIN.) WITH 42" (MIN.) UNOBSTRUCTED. SIDEWALKS ALONG ARTERIAL (THOROUGHFARE) ROADWAYS SHALL BE 5' MIN.
7. WATER METER CANS SHALL NOT BE LOCATED WITHIN DRIVEWAY PAVEMENT.

CITY OF ALLEN DEPARTMENT OF ENGINEERING	SIDEWALKS AND DRIVEWAYS	STANDARD CONSTRUCTION DETAILS PAVING		
		DATE: AUG. 2002	REV DATE: MAY 2013	SHEET : SD-P43

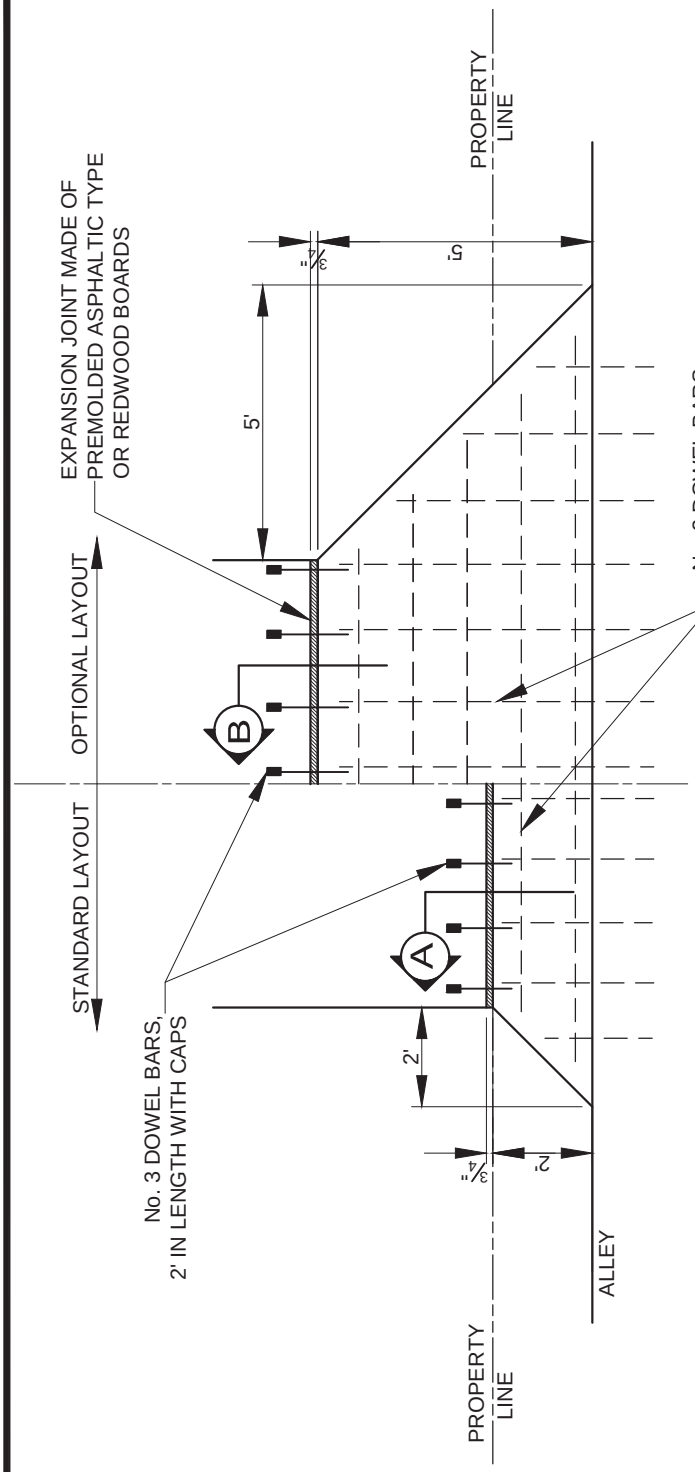

PLAN

SCALE N.T.S.

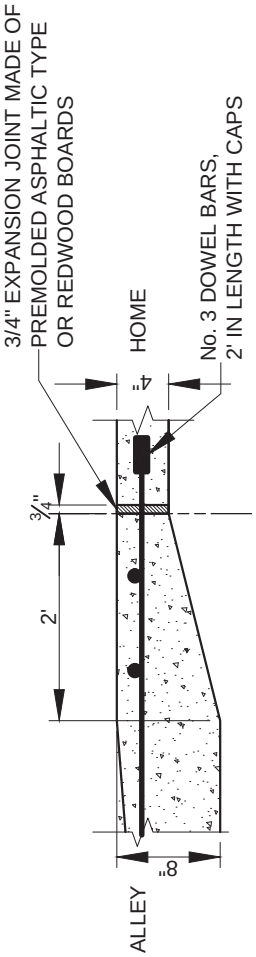

SECTION A

SCALE N.T.S.

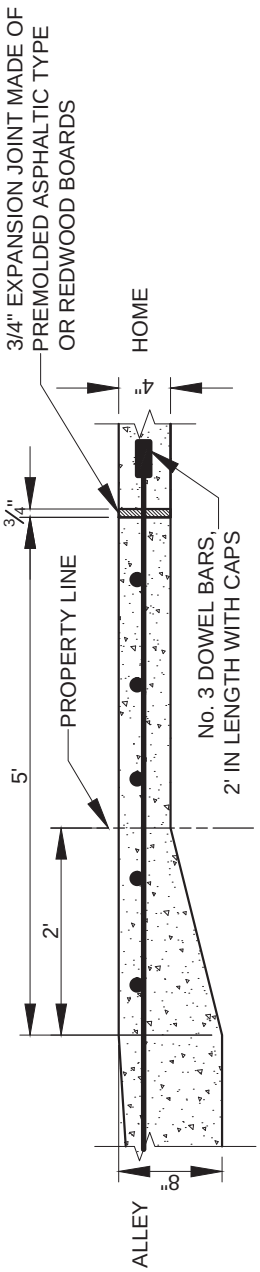

SECTION B

SCALE N.T.S.

CITY OF ALLEN DEPARTMENT OF ENGINEERING	DRIVEWAY RETURN FOR ALLEY	STANDARD CONSTRUCTION DETAILS PAVING		
		DATE: SEPT 1991	REV DATE: AUG. 2006	SHEET : SD-P44

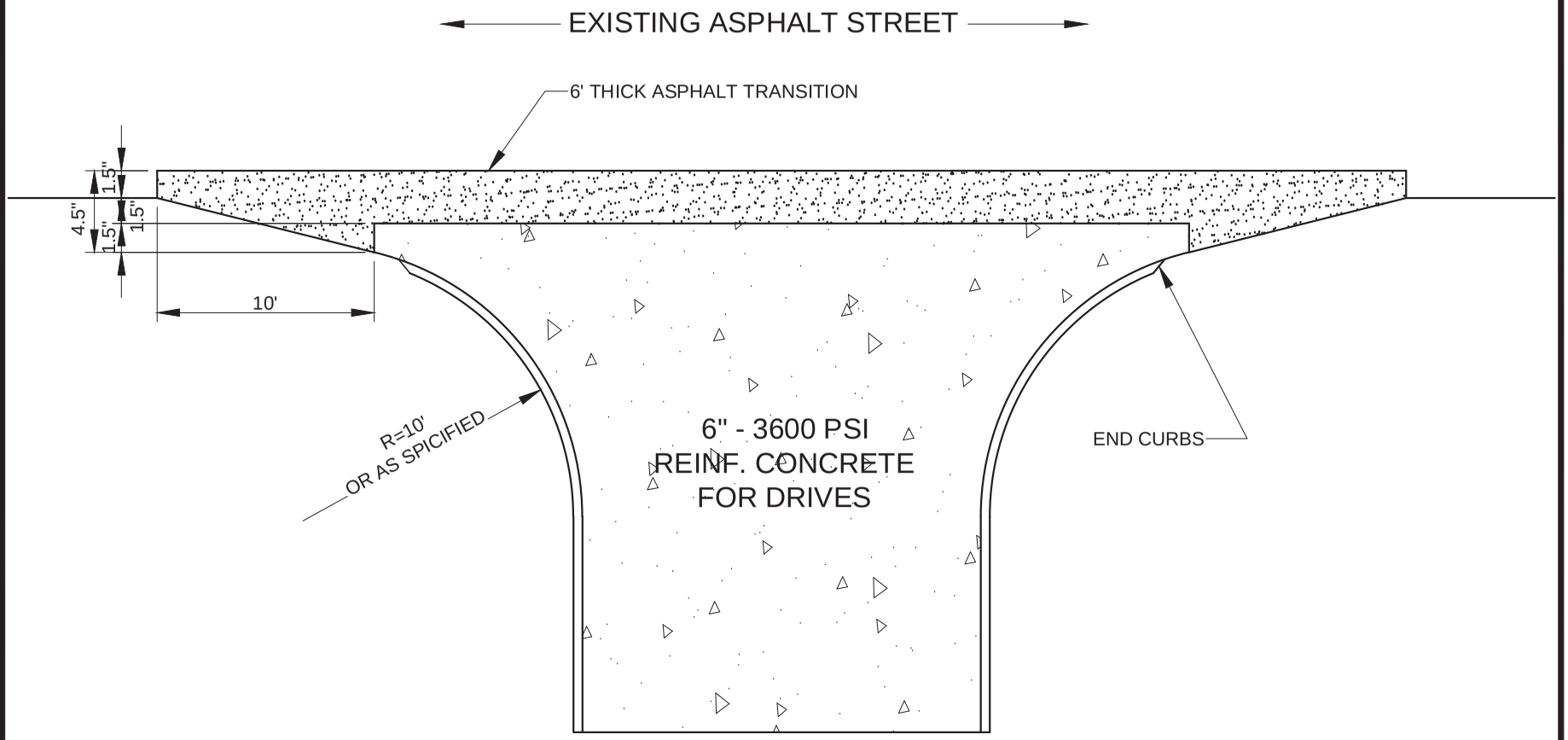

TYPICAL DRIVE OR STREET CONNECTION
TO EXISTING ASPHALT STREET

NTS

CITY OF ALLEN
DEPARTMENT OF ENGINEERING

STREET CONNECTION

STANDARD CONSTRUCTION DETAILS
PAVING

DATE:
SEPT 1991

REV DATE:
AUG. 2006

SHEET :
SD-P45

CITY OF ALLEN
DEPARTMENT OF ENGINEERING

SIDEWALK FLUME DETAIL

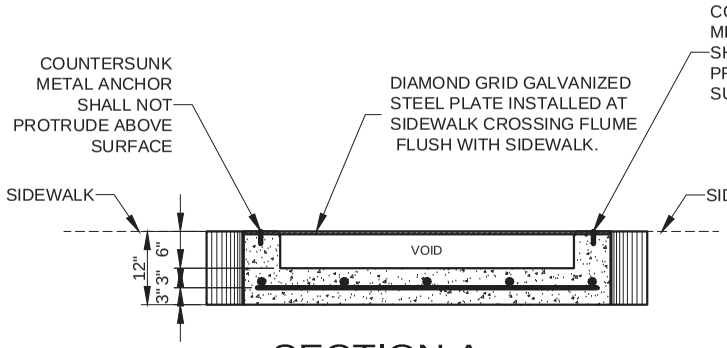

SECTION A

SCALE N.T.S.

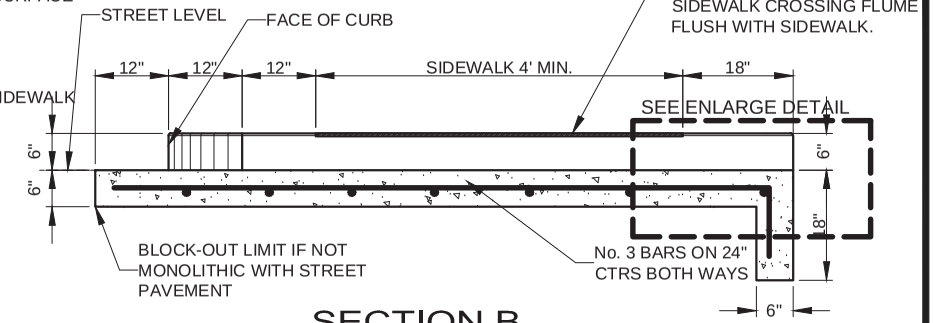

SECTION B

SCALE N.T.S.

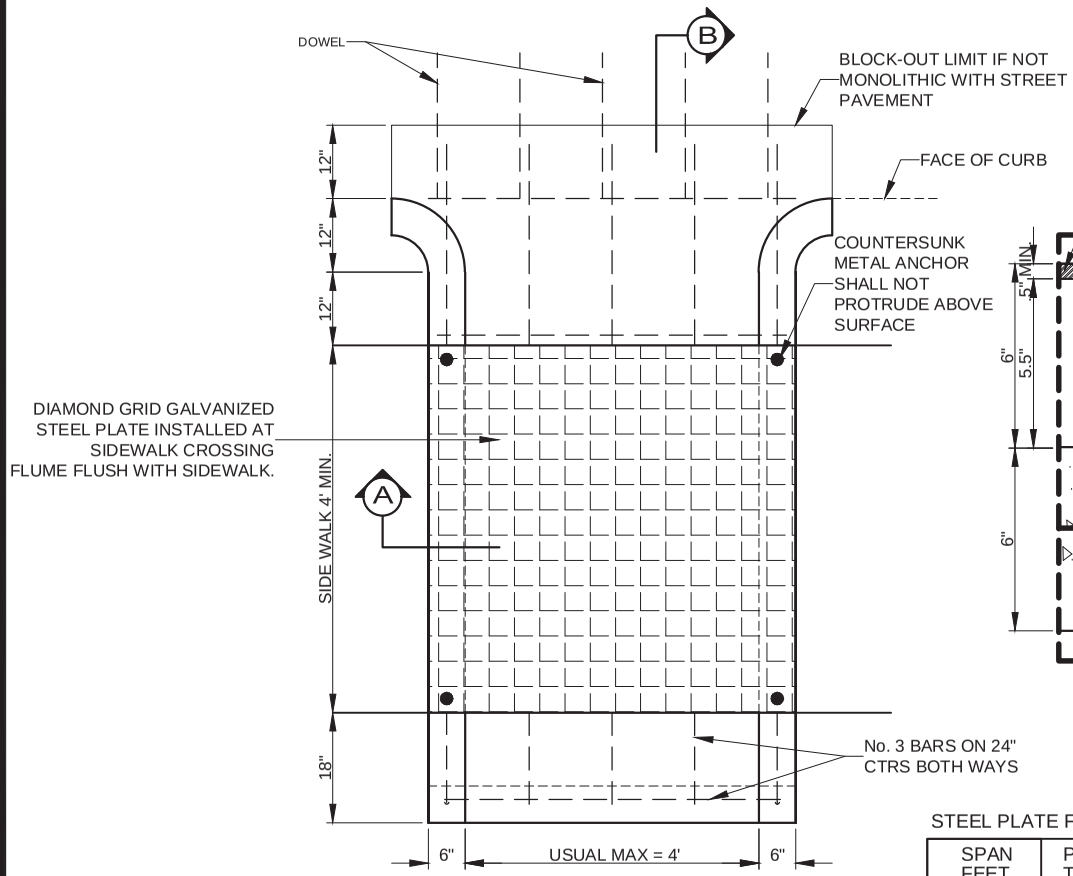

PLAN

SCALE N.T.S.

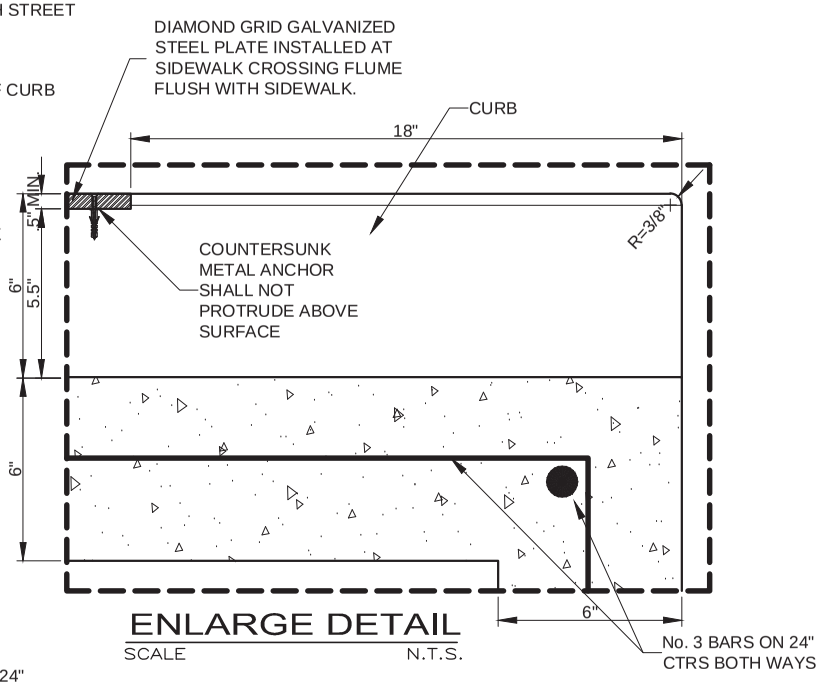

ENLARGE DETAIL

SCALE N.T.S.

STEEL PLATE FLUME COVER

SPAN FEET	PLATE THICKNESS INCHES
4	1/2"
6	5/8"
8	3/4"
10	7/8"

BASED ON 100 P.S.I. LIVE LOAD AND MAX. DEAD & LIVE LOAD DEFLECTION OF L/240 BOLT PLATE DOWN WITH BRASS BOLTS. BOLTS SHALL BE 1/2" DIA. RECESSED TO FLUSH WITH TOP OF PLATE AND SPACED A MAXIMUM OF 12" ON CENTERS. 1/2" DIA. SELF-DRILLING ANCHORS SHALL BE USED AND SPACED THE SAME.
SURFACE OF PLATE SHALL BE A NON-SKID MATERIAL.

STANDARD CONSTRUCTION DETAILS
PAVING

DATE: SEPT 1991
REV DATE: AUG. 2006
SHEET : SD-P46

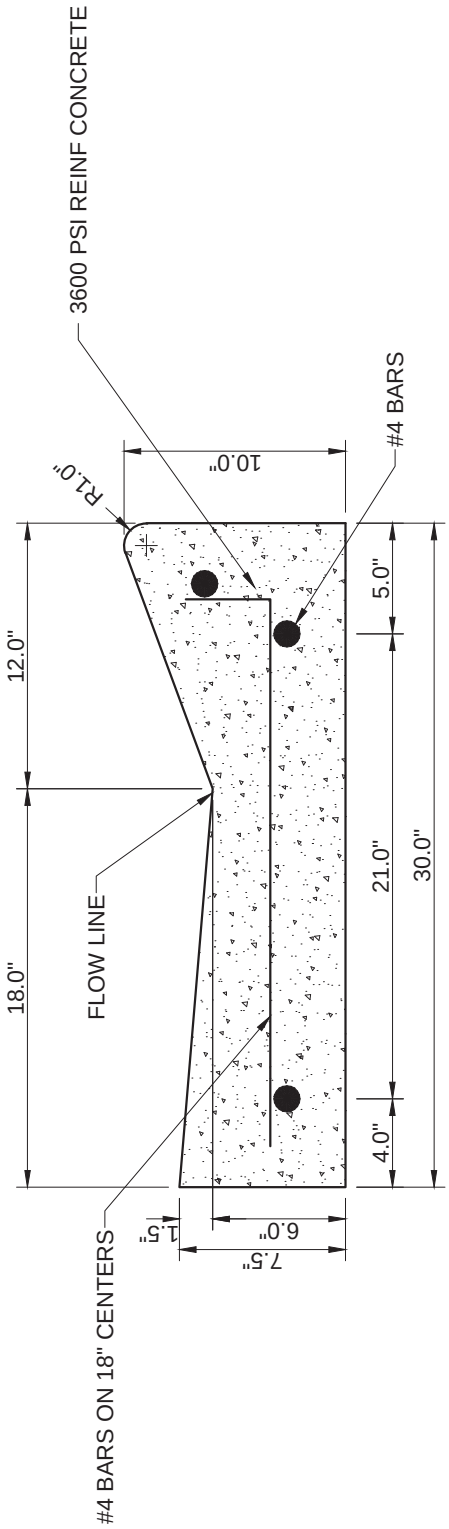

MOUNTABLE CURB SECTION (MCB)

SCALE N.T.S.

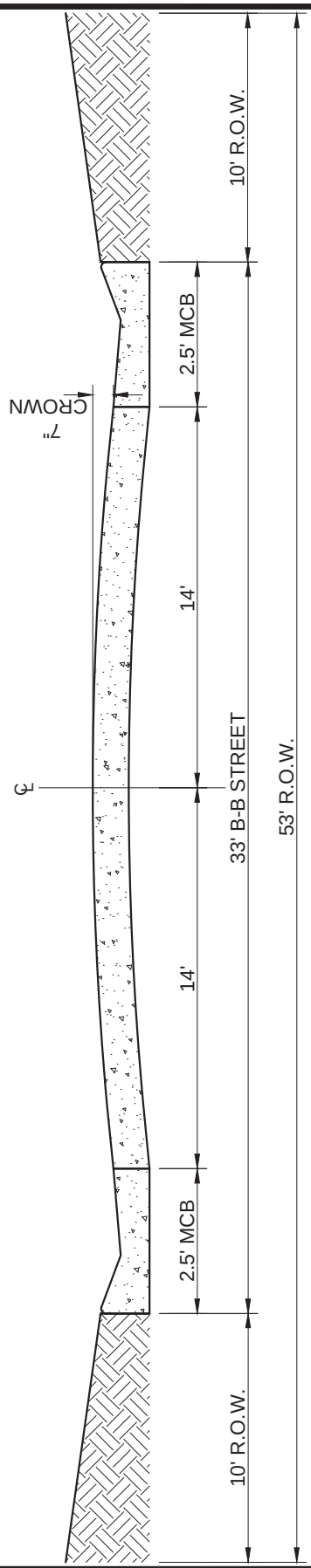

CITY OF ALLEN
DEPARTMENT OF ENGINEERING

ALTERNATE STREET R.O.W.
SECTION FOR MOUNTABLE CURB

STANDARD CONSTRUCTION DETAILS
PAVING

DATE:	REV DATE:	SHEET :
APR. 2001	MARCH 2010	SD-P47

CITY OF ALLEN
DEPARTMENT OF ENGINEERING

MAILBOX DETAIL

MAILBOX SHALL BE MADE OF LIGHTWEIGHT SHEET METAL OR LIGHTWEIGHT PLASTIC. HEAVY STEEL, CAST IRON OR DECORATIVE MAILBOXES SHALL NOT BE USED. U.S. POSTAL MAILBOX REQUIREMENTS ARE IN POSTAL BULLETIN No. 21907

TYPICAL MAILBOX SIZE IN INCHES	
WIDTH	HEIGHT
9.25	22.5

* MAXIMUM ALLOWED DIMENSIONS FOR MAILBOX

MAILBOX SIZES

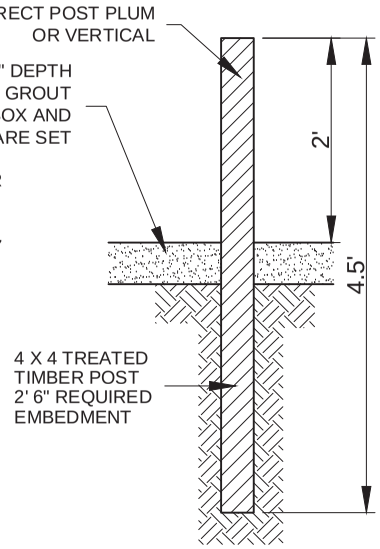

ENLARGE TYPE 5 SUPPORT/FOUNDATION

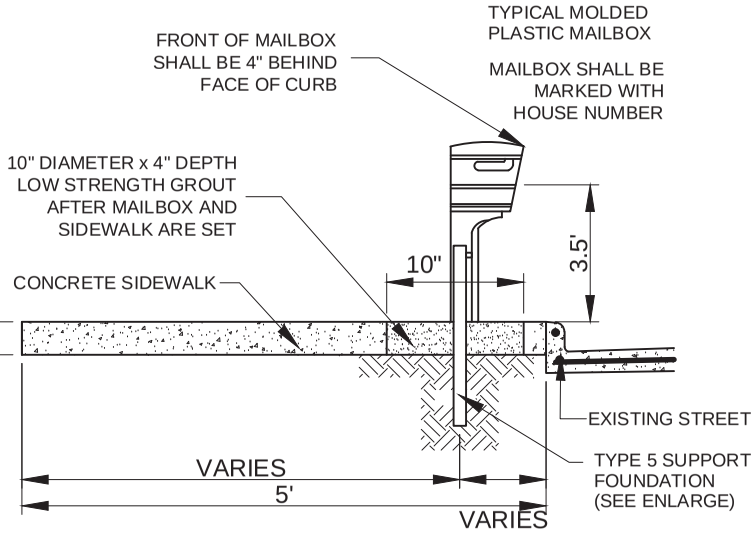

SECTION A

SCALE N.T.S.

ONE PIECE MOLDED PLASTIC MAILBOXES

MOLDED PLASTIC MAILBOXES SHALL BE INSTALLED ON 4" X 4' TREATED TIMBER POSTS ONLY. POST MAY BE SET IN LOW STRENGTH GROUT. THE USE OF STEEL PIPE OR STRUCTURAL TUBING IN PLACE OF TIMBER POST IS PROHIBITED. MAILBOX SHALL BE STEP 2 MODEL # 533800 OR APPROVED EQUAL

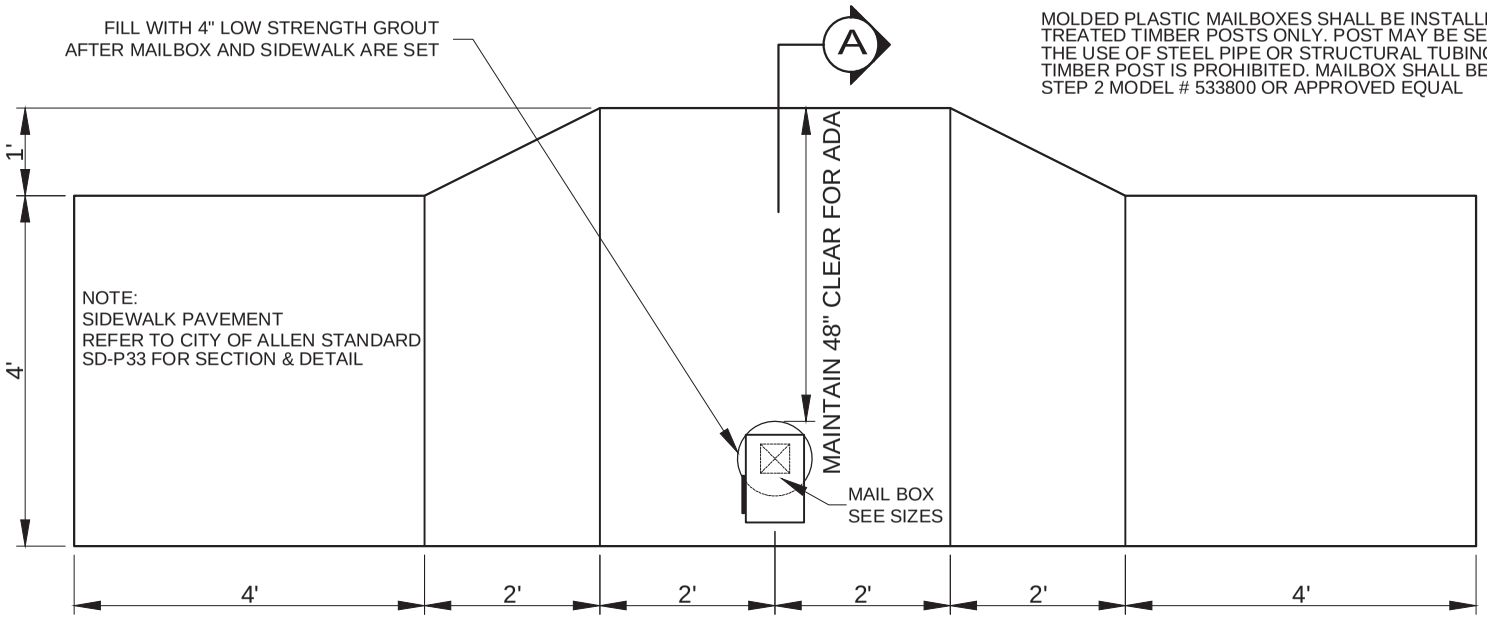

PLAN

SCALE N.T.S.

NOTE:
FRONT OF MAILBOX LINES UP WITH BACK OF CURB

FOR TWO MAILBOXES, MAINTAIN 1' SPACING BETWEEN MAILBOXES AND 1.5' FROM JOINT TO EACH MAILBOX.

STANDARD CONSTRUCTION DETAILS
PAVING

DATE: DEC 2008

REV DATE:

SHEET : SD-P48